WTO

INTELLIGENT PROCESS OPTIMIZATION

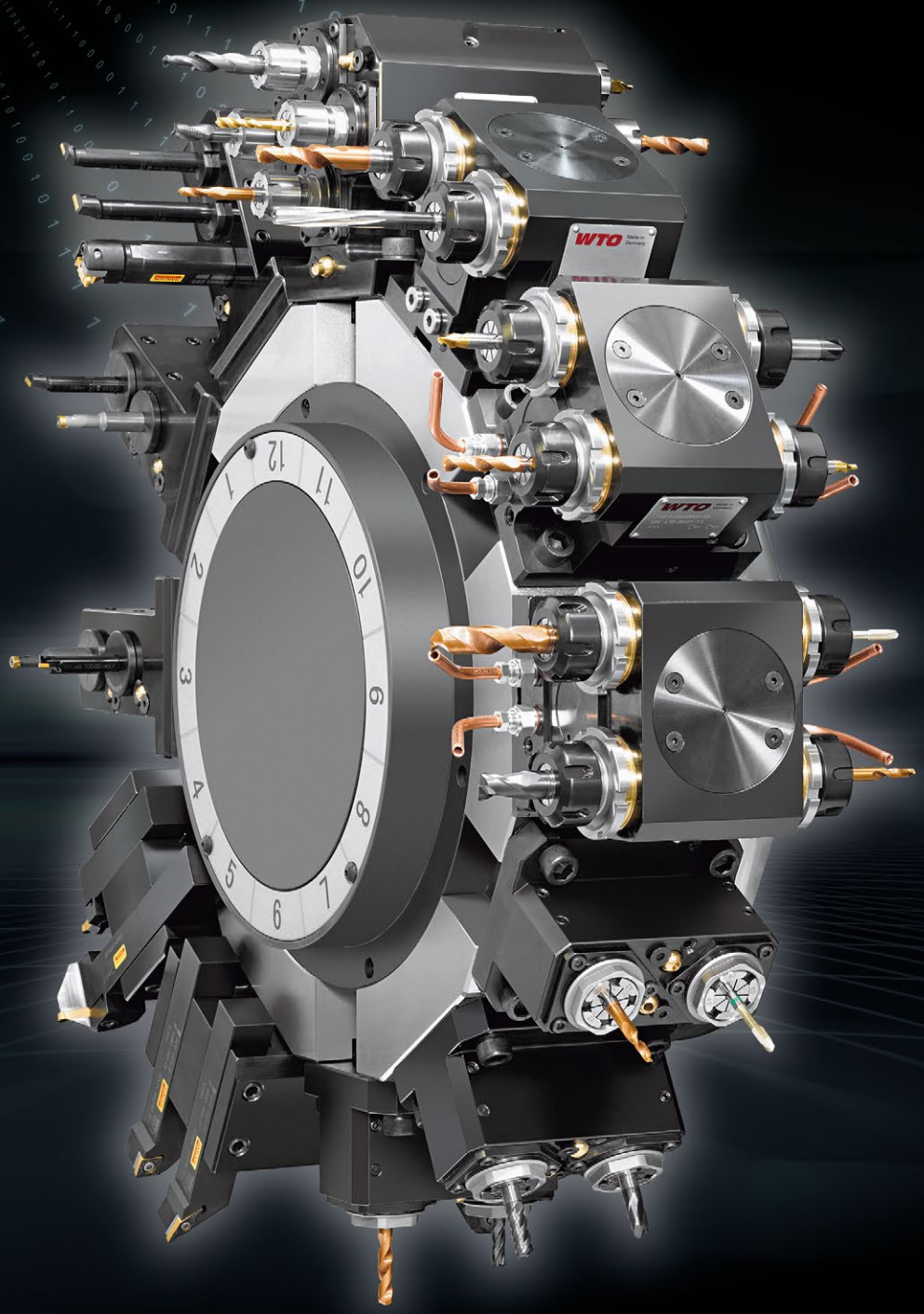

IWTO
TOP 100
Top-Innovator
2025

INNOVATION

WTO has convinced in the renowned competition “TOP 100” and is now one of the TOP 100 Innovators in Germany! The decisive factors were WTO‘s right innovation strategy and innovative strength.

HIGHER PRODUCTIVITY

As a global market leader, we manufacture technologically advanced high precision tool holders for turning centers, Swiss-type lathes, multi spindle turning centers and Ultra-High-Speed spindles that are known for high performance and long lifetime.

By using our innovative tool holder technologies, our customers achieve higher productivity. This is one of the reasons why our products are used worldwide, wherever precise parts are manufactured with maximum productivity.

INDUSTRY 4.0
QuickFlex®
smart

WTO

State-of-the-art technology for maximum productivity. Based on this philosophy, WTO develops and manufactures precision toolholders of the highest technological and quality standards.

When used intelligently, processes are optimized and production efficiency increases.

WTO Driven Precision Tool Holders equipped with innovative “smart” technology enable intelligent online process monitoring.

INTELLIGENT PROCESS OPTIMIZATION

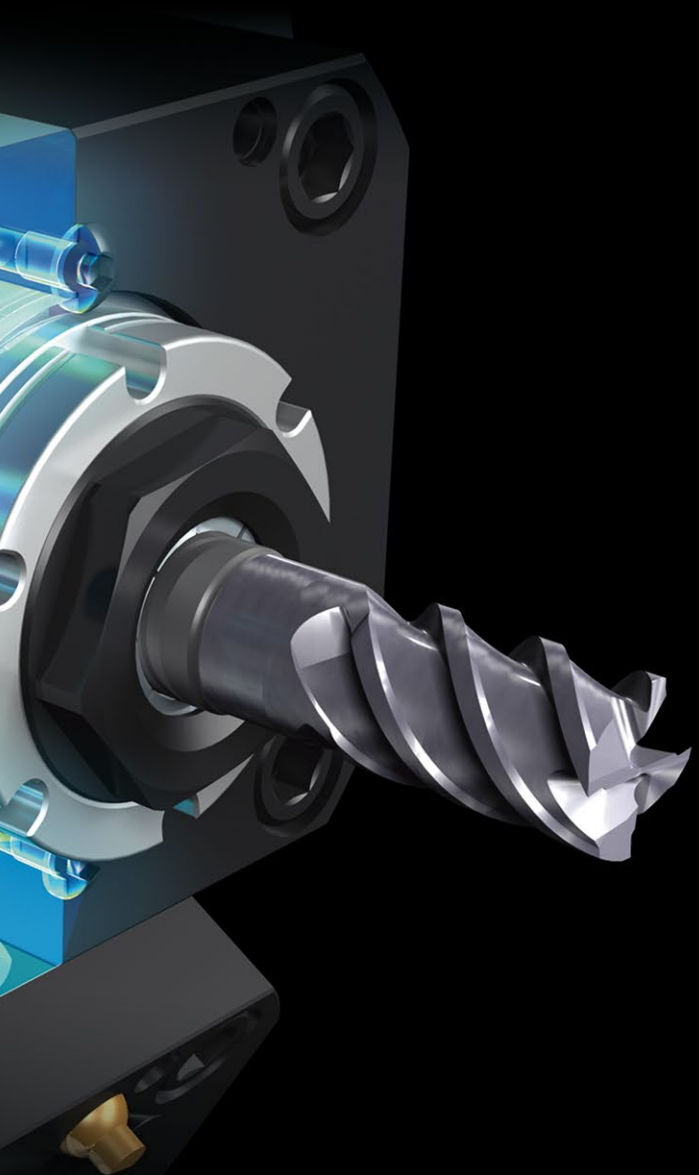

HIGH TECH
MADE IN GERMANY

From the technical design to the finished product we make no compromises when it comes to manufacturing our high precision tool holders.

Permanent investment in state-of-the-art production technologies, high quality standards and a high level of vertical integration ensure outstanding product quality. Our products are in use worldwide, wherever precision parts are manufactured on turning centers with high productivity.

WE WORK FOR THE

SUCCESS OF OUR CUSTOMERS

Motivated employees are the basis for 100% consistent customer focus.

WTO, a family-run technology company, offers a modern working environment that contributes to highly motivated employees.

Today, WTO employs more than 300 well-trained and highly qualified specialists worldwide to support and promote customer success.

WTO
WTO
WTO
WTO
WTO 207032000
ER-32QF
14
15
16
1
2
3
4
5

QuickFlex®

The perfect combination: ER collet chuck and quick change system in one driven tool holder made by WTO.

High runout accuracy and stability are guaranteed by two independent taper connections.

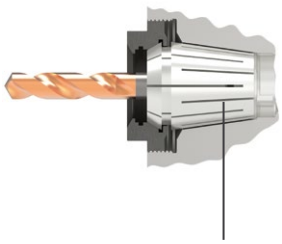

With ER collet

With QuickFlex® mill arbor adapter

Quick and safe tool change with the patented one-hand wrench.

QuickFlex
WTO
QuickFlex
smart

QuickFlex® smart

The New Generation of Smart Driven Tool Holders with intelligent Condition Monitoring

- Integrated wireless electronic sensor/transmitter unit
- Secure data transfer with Bluetooth standard BLE 4.2
- Monitoring of speed, temperature, vibrations, runtime
- Clear status presentation of all assigned driven tool holders
- Condition monitoring of the assigned machines
- Complete data history of each driven tool holder

True online process monitoring

- All relevant data is transmitted live during operation
- Permanent monitoring of production parameters
- Display of the operating time and remaining time until the service interval

Coromant
Capto
Coromant
Capto
Coromant
Capto

Coromant Capto®

The quick change system from Sandvik Coromant for fastest tool setup time. Faster return on investment.

Coromant Capto® is a modular quick change system certified according to ISO 26623. It combines high rigidity with high flexibility in one system.

The globally available quick change system for turning centers is universally applicable for turning, drilling and milling.

High investment security through ISO standard. Sales worldwide via Sandvik Coromant.

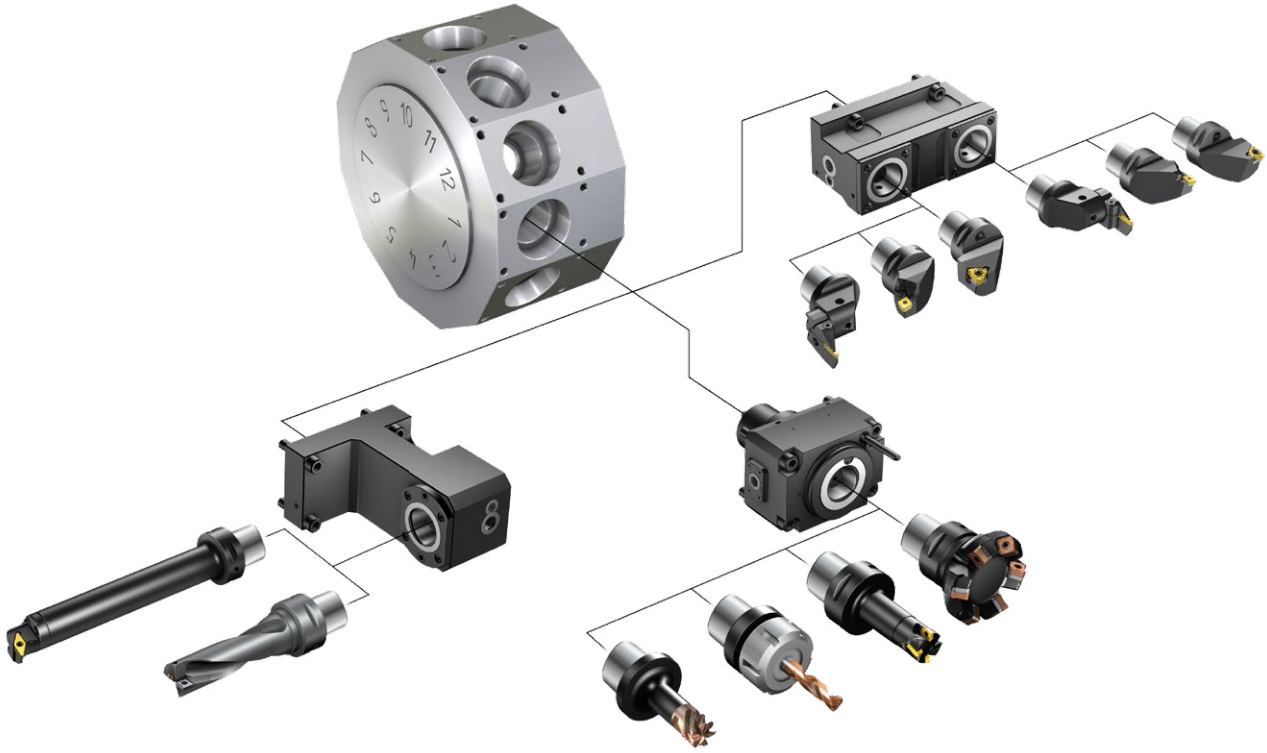

Short adapters available from WTO

For precision driven tool holders with Coromant Capto® the use of short adapters with no gripper groove leads to significant advantages: More available cutting tool length, higher accuracy and higher stability.

MAX 150 BAR

Precision Static Tool Holders

Precision Static Tool Holders from WTO are individually designed for each turning center and manufactured with the highest precision so that you are able to use the full capacity of your machine.

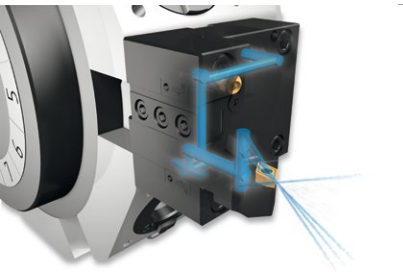

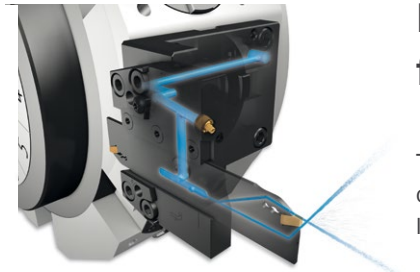

Internal coolant supply for highest productivity

The new generation of shank and blade tool holders with internal coolant supply through the tool shank: for increasing cutting tool life and cutting feed rate with fast tool set-up time.

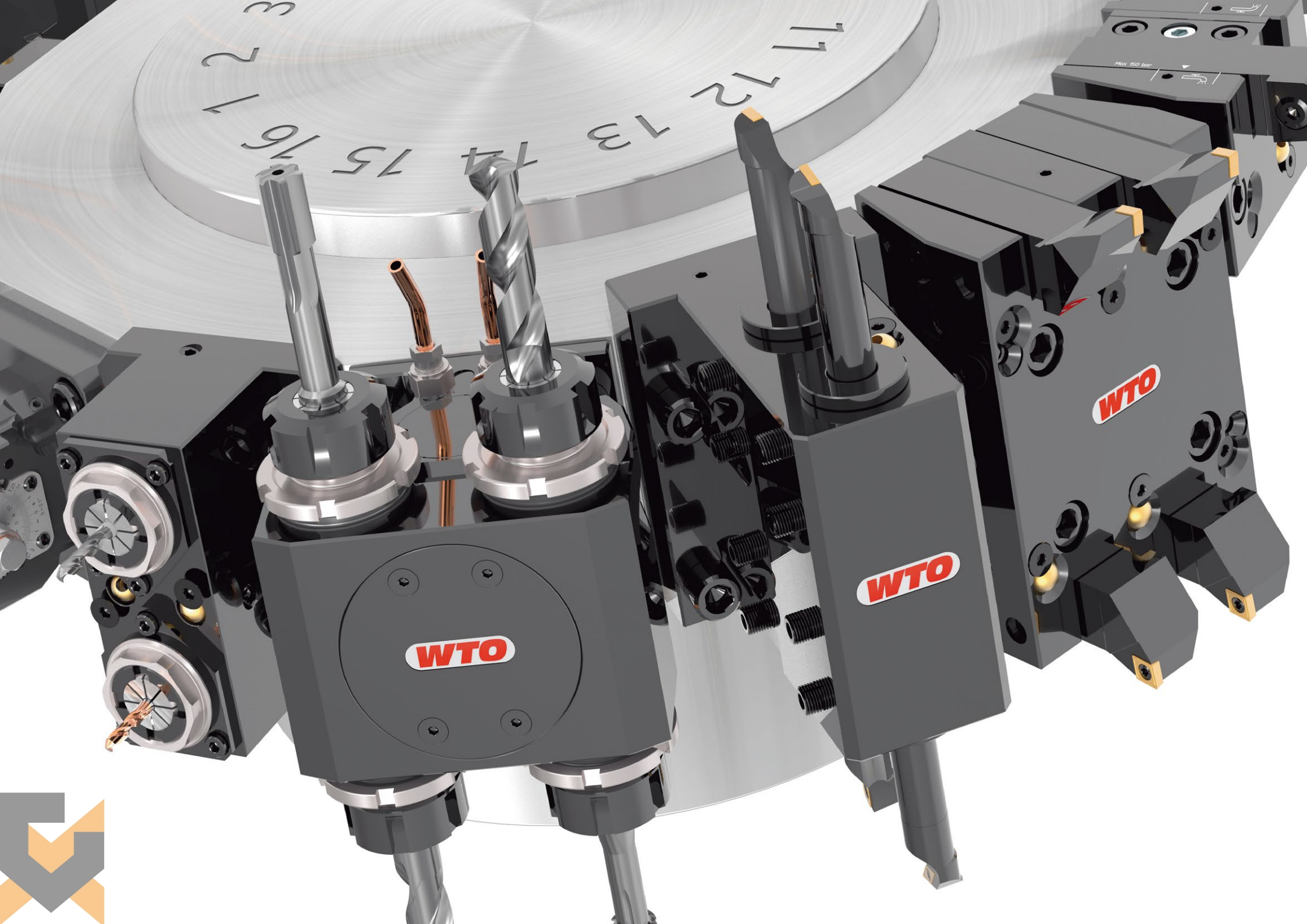
WTO
WTO
WTO
Max 150 bar

Multiple Tool Holders

Multiple Tool Holders from WTO to multiply the available tools on turning centers with Y axis.

The enhancement of available cutting tools allows the production of a more complex and more comprehensive range of work pieces without changing the machine set-up.

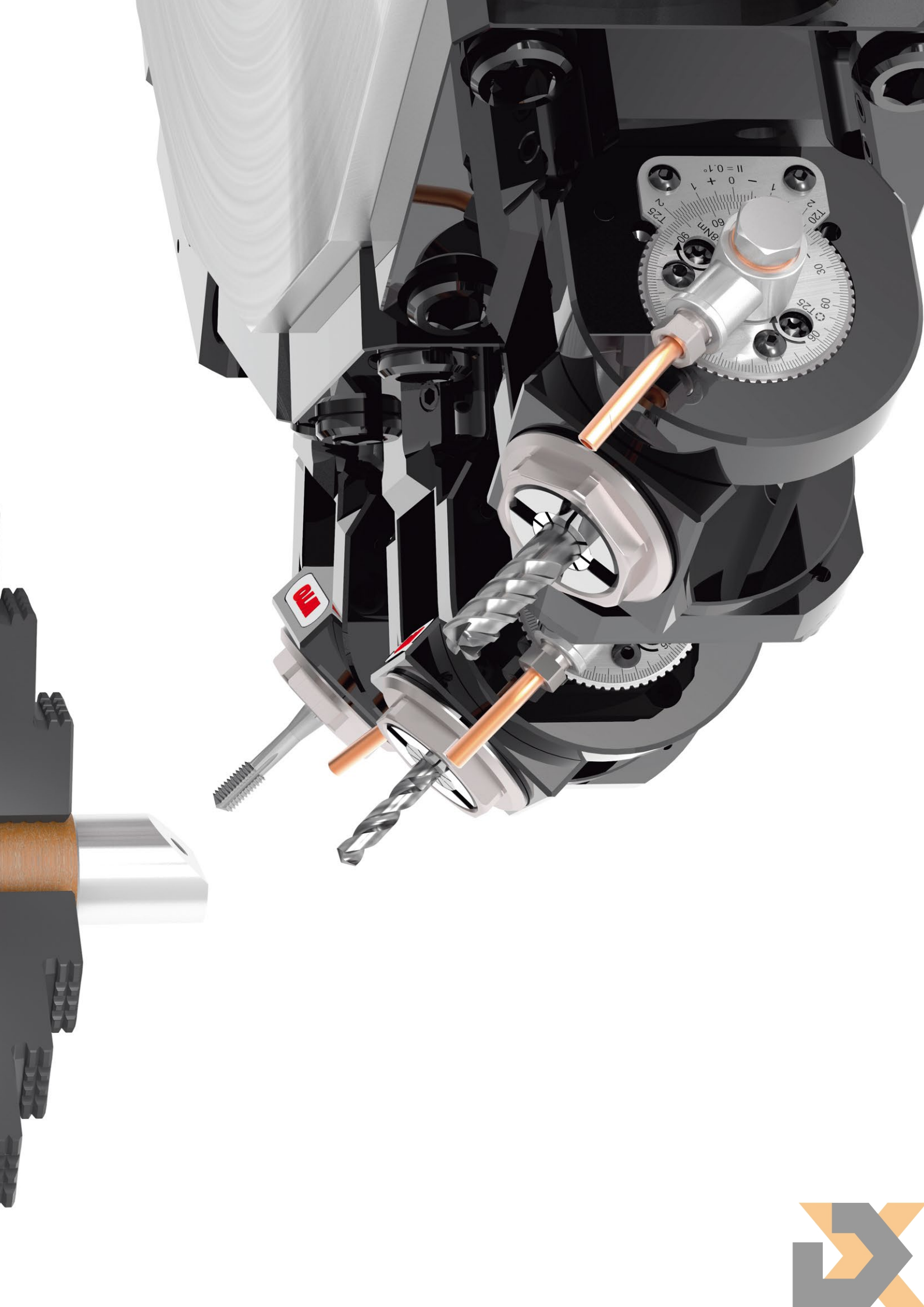
8Nm
11 = 0,1°

Adjustable Angle Units

The WTO high-precision Adjustable Angle Drill-Milling Units enable the complete machining at any angle on CNC turning centers.

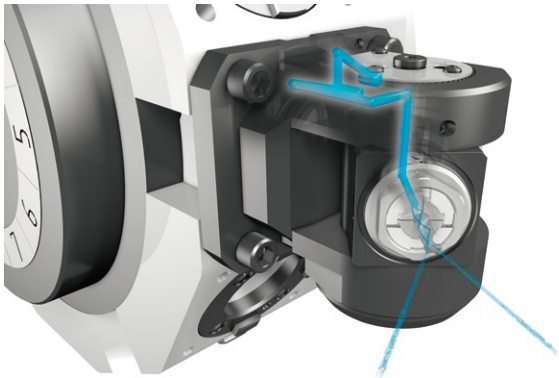

Internal coolant supply through the spindle with max. 80 bar/1160 psi

Through various gear ratios and internal high pressure coolant supply up to 80 bar/1160 psi, drilling and milling cycles can be optimized for higher productivity of your machine.

WTO
WTO
WTO

Broaching Unit

The automatic Broaching Unit from WTO for economic manufacturing of oriented keyways and splines with up to 1,000 strokes per minute and max. 12 mm groove width.

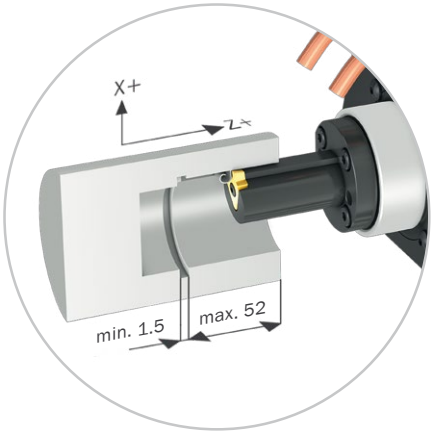

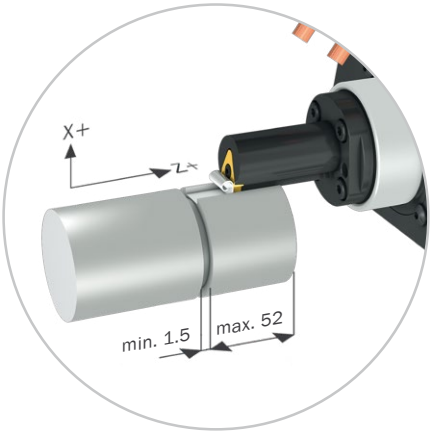

Same insert holder for ID and OD broaching by rotating 180 degrees.

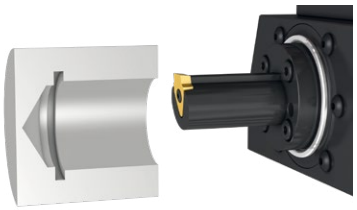

1
Position insert on Z

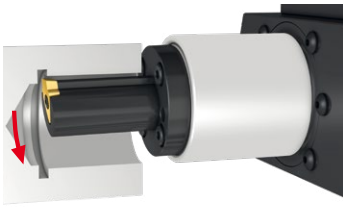

3
Cutter lifts from workpiece

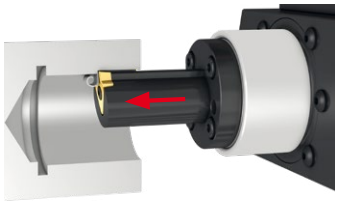

2
Cutter drives into workpiece

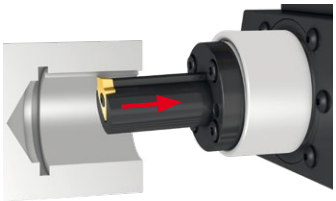

4
Lift-off function prevents wear/ breakage when cutter retracts

WTO

Gear Hobbing Unit

Highly productive manufacturing of gears with CNC turning centers.

The Gear Hobbing Unit from WTO offers high stiffness and runout accuracy. High versatility due to interchangeable milling arbors for different cutting tools.

Usable for machining gear quality according to standard 8 ISO 1328, AGMA 8

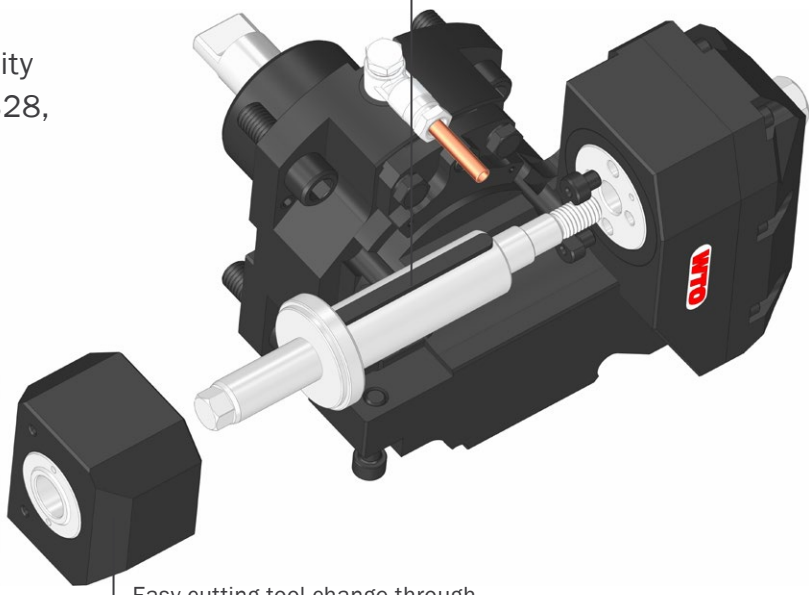

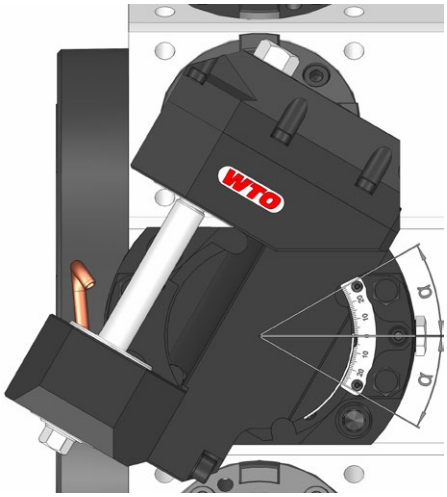

Maximum scale swing of ±30° with scale and vernier

WTO

Power Skiving Unit

Highly productive gear machining: Skiving of ID and OD splines on CNC turning centers.

The WTO Power Skiving Unit offers high stiffness and runout accuracy. The hydro chuck spindle enables an accurate and quick cutting tool change.

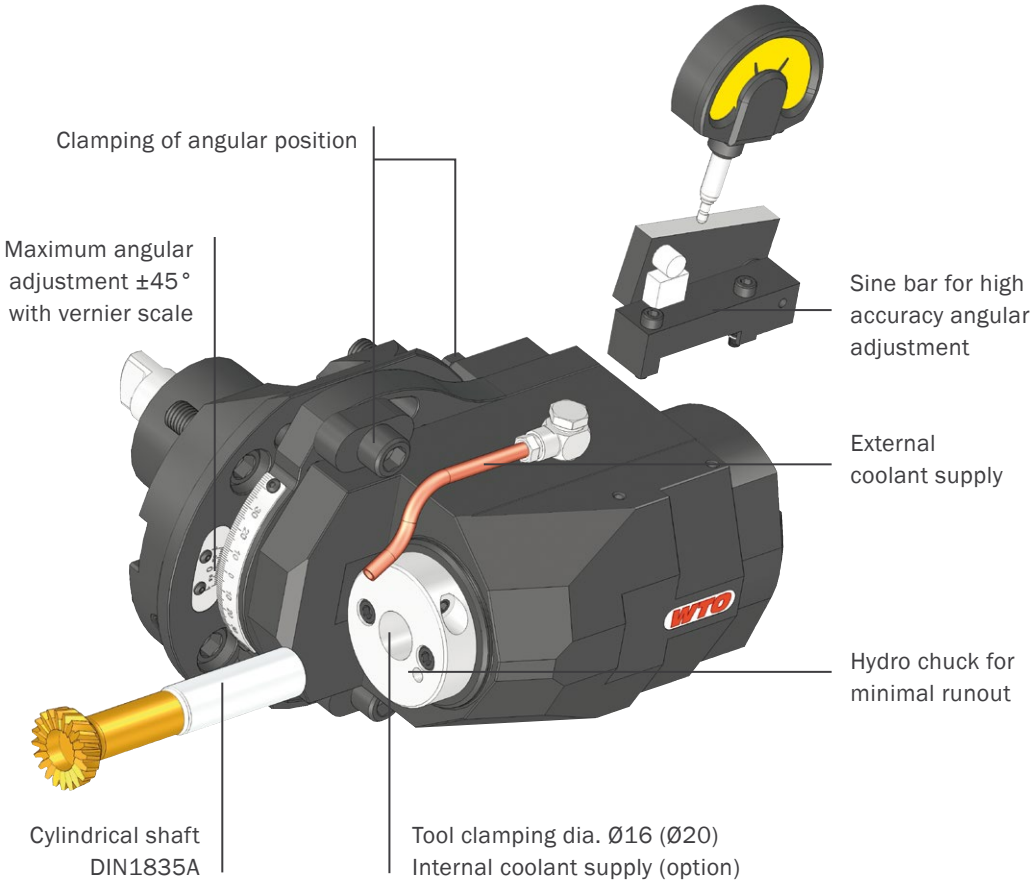

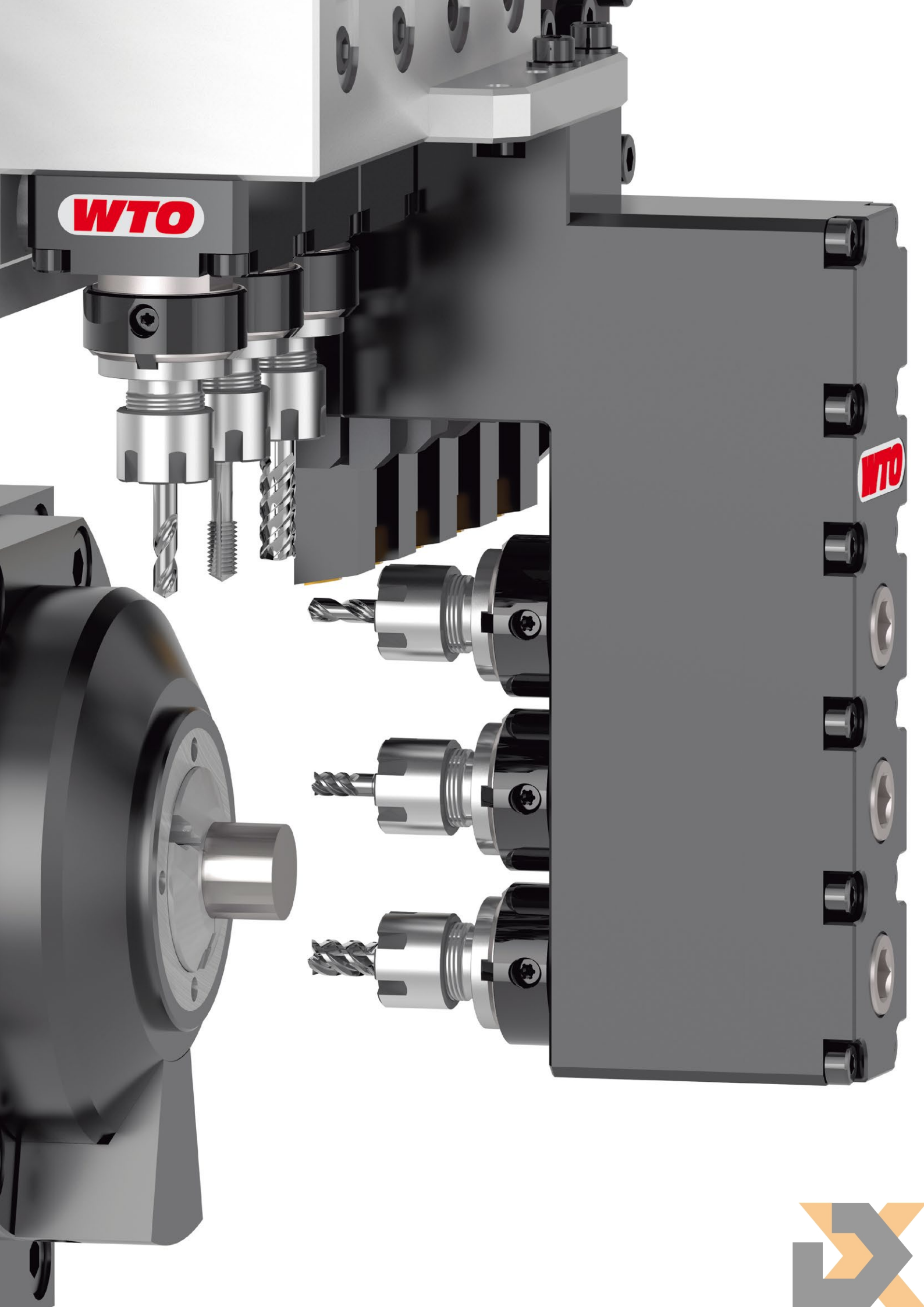
WTO
WTO

nanoFlex®

The perfect combination: ER collet chuck and modular quick change system in one tool holder.

Regular tool clamping using ER collet.

Quick change using nanoFlex® adapter.

Large product range for Swiss-type turning centers

Besides the standard versions we are offering application specific driven tool holders to increase the productivity of your Swiss-type turning center:

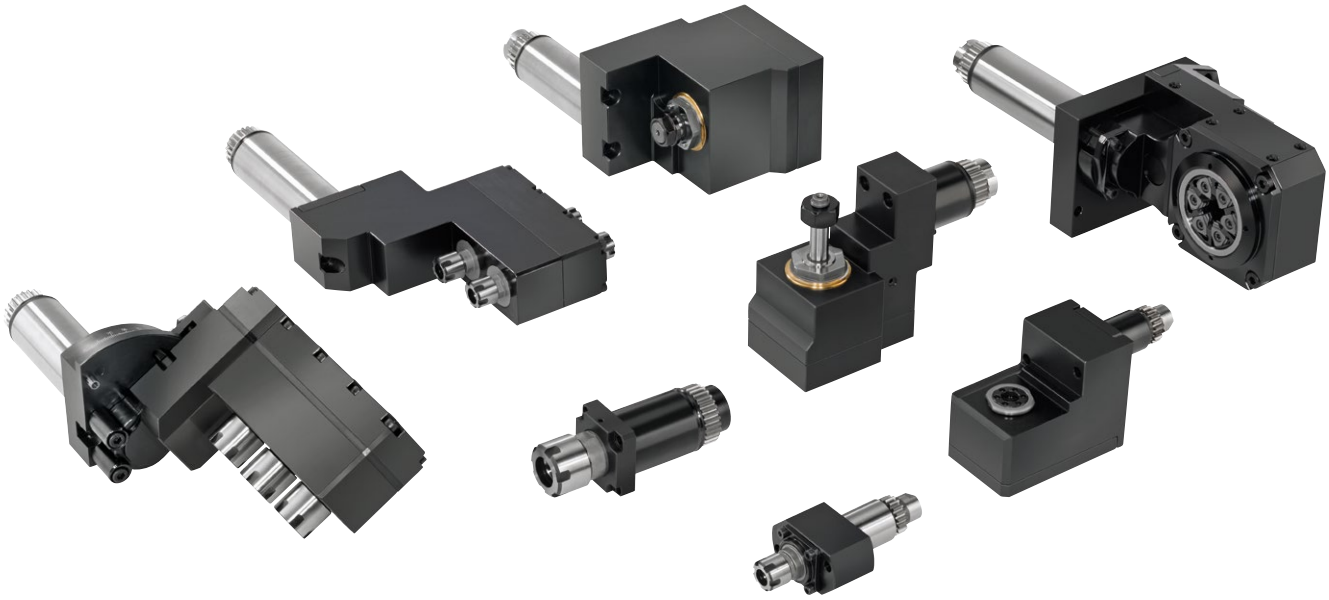

Thread whirling units, gear hobbing units, adjustable angle drill/milling units, high speed drill/milling units, deep hole drilling units up to 200 bar/2900 psi coolant pressure and slitting saw units.

CoolSpeed® MAX

Ultra-high rotation speed up to 60,000 rpm
Two turbines and adjustable number of jets
Applications: Milling, Drilling, Grinding, Deburring, Engraving

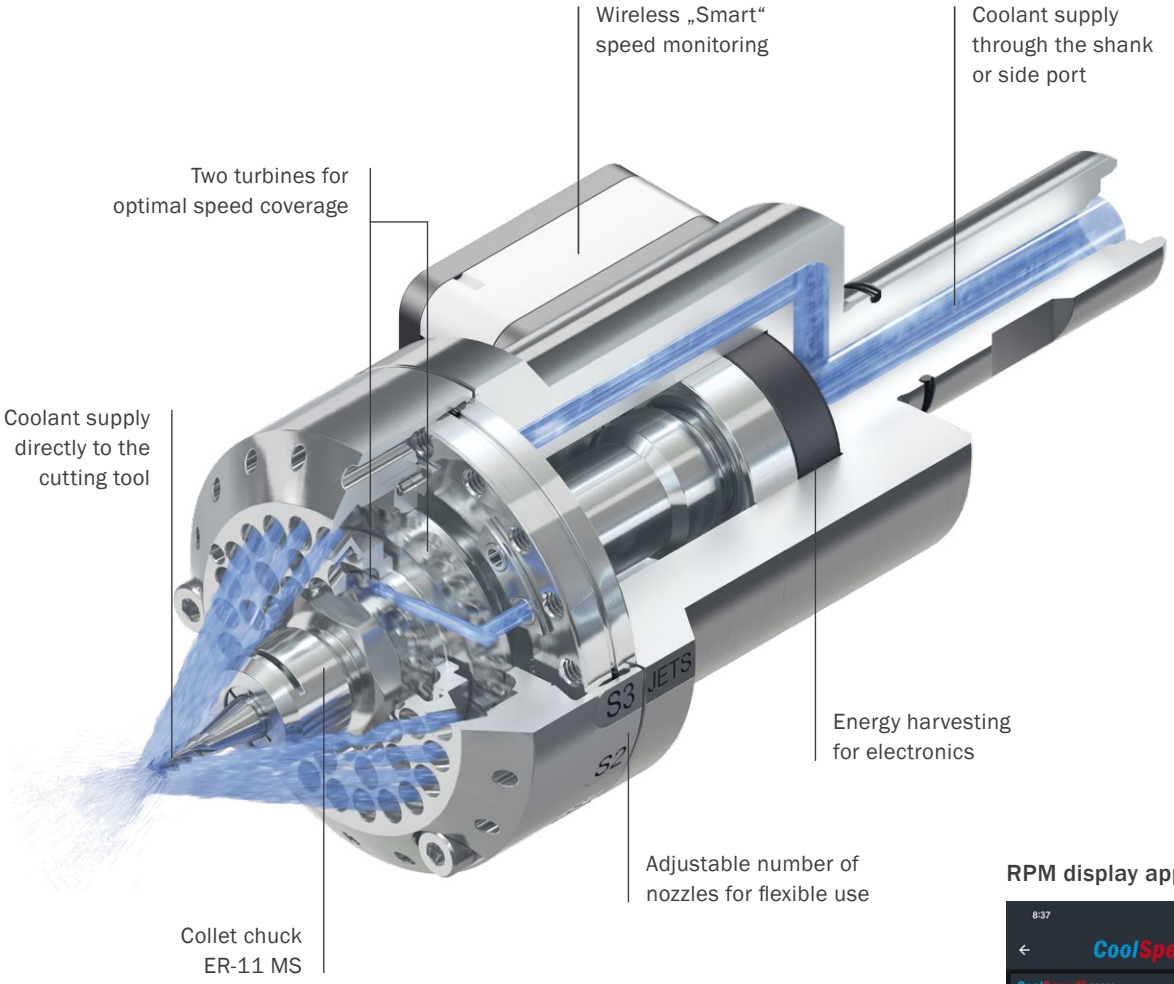

RPM display app

Driven by	Coolant or Cutting Oil
Rotation Speed	20,000-60,000 rpm
Number of Jets	1-3 (adjustable)
Number of Turbines	1 small + 1 large (adjustable)
Operating Pressure	20-70 bar (290-1015 psi)
Flow Rate	12-32 l/min (3-8.5 gal/min)
Maximum Power	360-1100 W
Cutting Tool Shank Ø	0.5-7.0 mm

CoolSpeed® Flex

Ideal for Swiss-type lathes and turning centers.
Best dynamic runout.
Extended tool life.

Driven by	Coolant or Cutting oil
Rotation Speed	30,000-80,000 rpm
Number of Jets	1-5
Operating Pressure	10-60 bar (145-870 psi)
Flow Rate	8-28 l/min (2.0-7.5 gal/min)
Maximum Power	150-500 W
Tool Shank Ø	3 mm, 4 mm, 6 mm

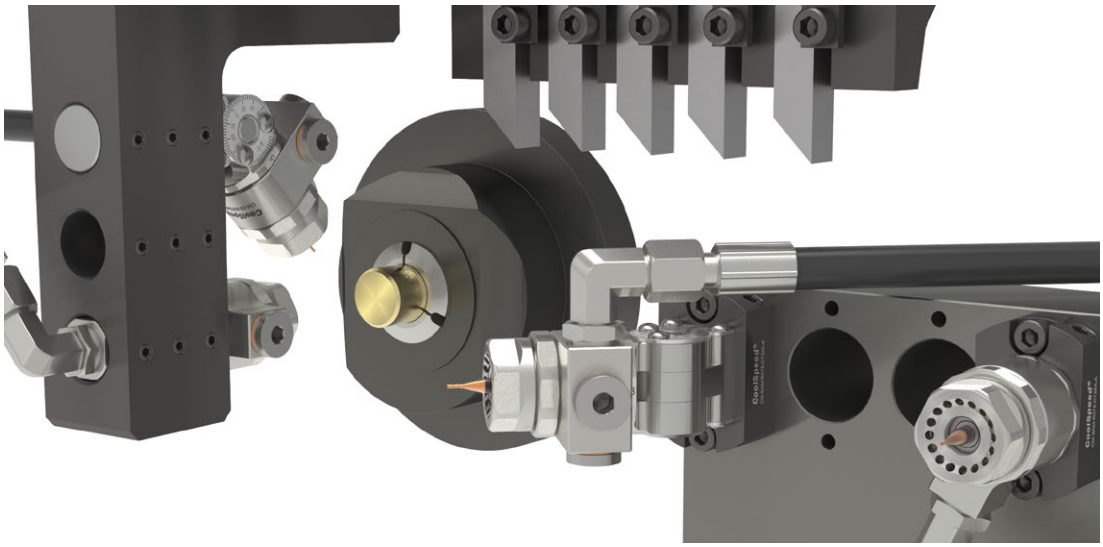

WTO worldwide

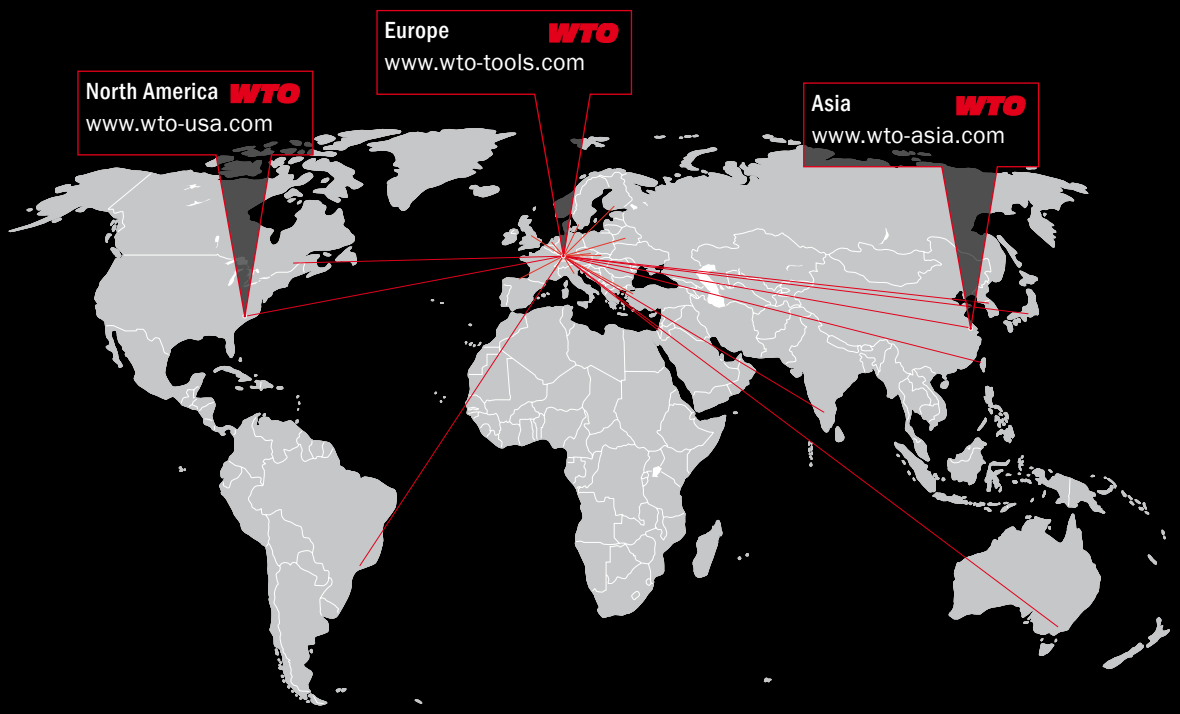

WTO Werkzeug-Einrichtungen GmbH
Neuer Hohdammweg 1
77797 Ohlsbach
Germany

WTO Inc.
9210 Porters View Dr.
Charlotte, NC 28273
USA

WTO Asia
WTO Precision Tool Holders (Shanghai) Co. Ltd.
Room 109-110, Building 2
No. 228 Banting Road
Jiuting Town,
Songjiang District
201615 Shanghai
China

Our distribution partners. Competence right there.

Australia
Dimac Tooling Ltd.
sales@dimac.com.au

Brazil
TF2
tfdois@tfdois.com.br

Canada
Mittmann Industrial Inc.
info@mittmann.com

China
Shanghai Gangde
wtocando@yahoo.com

Czech Republic
ALBA precision, spol. s.r.o.
info@albaprecision.cz

Denmark
AVN Teknik A/S
tml@avn.dk

Finland
Suomen Terätuonti Oy
myynti@stt.as

France, east
Loïc Cailloux
lca@wto.de

France, west
Christophe Archambault
car@wto.de

Great Britain
Cutwel Ltd.
sales@cutwel.net

Hungary
Prevotex Hungary Kft.
info@prevotex.hu

India
Ulhas Patil
u.patil@wto-asia.com

Israel
E.Y.A.R. Ltd.
boris@eyar.co.il

Italy
Prymark srl
commerciale@prymark.it

Japan
NK Works Co. Ltd.
k_samba@nk-works.co.jp

Korea
James Shim
james.shim@wto-korea.com

Mexico
Workholding Engineering De México
info@wem.com.mx

Netherlands
Toologic BeNeLux B.V.
info@toologic-benelux.nl

Norway
Helge Karlsen Verktøy og Maskin AS
hkvm@hkvm.no

Poland
ARCO Andrzej Rudenko
info@arcotools.pl

Romania
SC Elif Trading SRL
bulent.ozkan@eliftrading.com

Slovakia
ALBA precision s.r.o.
albaprecision@albaprecision.sk

Spain
ITALMATIC, S.A.
italmatic@italmatic.es

Sweden
Bonthron & Ewing AB
info@bonthron-ewing.se

Switzerland
Utilis AG
info@utilis.com

Taiwan
Kaiko Co., Ltd.
info@kaiko.com.tw

Turkey
MYK CNC MAKINA SAN. VE
huseyin.tatlidil@mykcnc.com.tr

Ukraine
„LLC“ SPA Stankopromimport
info@phoenix-ua.com

WTO, QuickFlex® and nanoFlex® are trademarks of WTO Vermögensverwaltung GmbH
CoolSpeed® is a trademark of WTO Inc.

03 I 2026 en