WTO

CoolSpeed® mini

Affordable ultra-high rotation speed
up to 80,000 rpm!

In operation:

Fits in standard tool holders
Best dynamic runout
Extended tool life

CoolSpeed® mini

Affordable ultra-high rotation speed up to 80,000 rpm!

Applications: Milling, Drilling, Grinding, Deburring, Engraving.

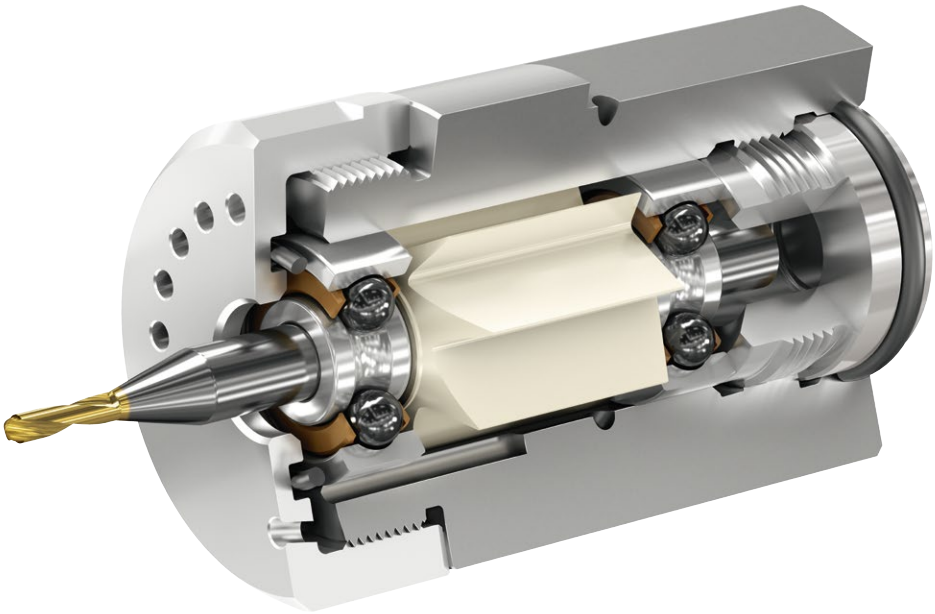

Driven by	**Coolant or Cutting oil**	**Air mist**
Rotation Speed	30,000-80,000 rpm	45,000-50,000 rpm
Number of Jets	4	12
Operating Pressure	10-60 bar (145-870 psi)	4-5 bar (58-73 psi)
Flow Rate	24 l/min (6.3 gal/min)	1,040 l/min (36.7 cfm)
Maximum Power	420 W	300 W
Tool Shank Ø	3 mm, 4 mm, 6 mm	3 mm, 4 mm, 6 mm

© WTO Werkzeug-Einrichtungen GmbH * Subject to change without notice * www.wto-tools.com

CoolSpeed® mini is a new state-of-the-art turbine-driven ultra-high-speed spindle. Due to its unique design, it is possible to operate the spindle with coolant, cutting oil or air mist.

Driven by Coolant or Cutting Oil

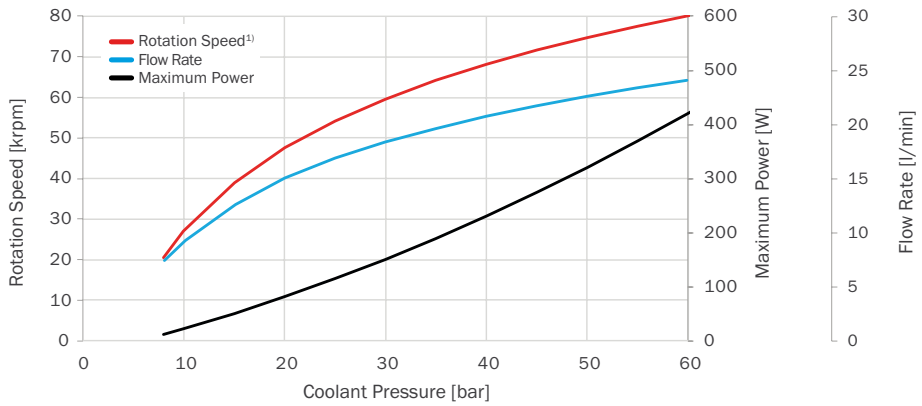

[1)] Idle speed. The operation speed is approx. 10 % lower depending on the load

Driven by Air Mist

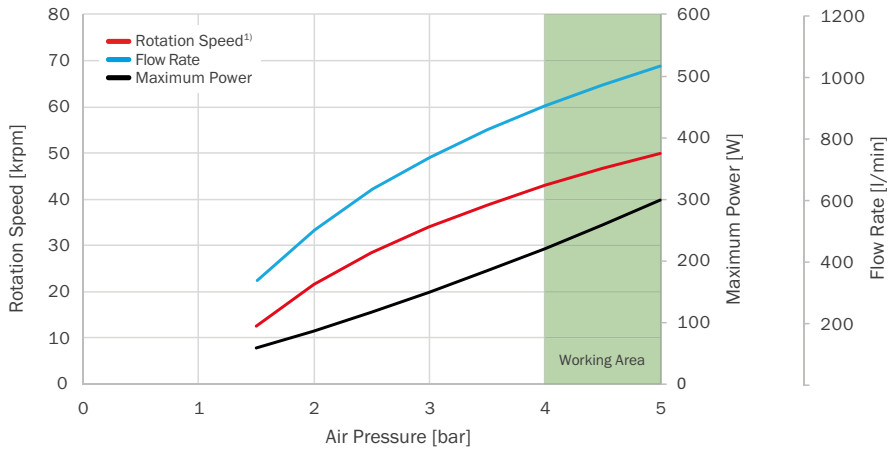

[1)] Idle speed. The operation speed is approx. 10 % lower depending on the load

CoolSpeed® mini

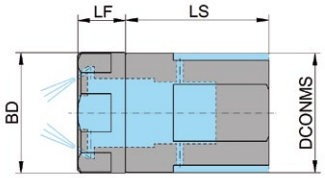

Note:
Do not clamp with side lock screws.

Item No.	DCONMS	LS	LF	BD
CM-CE-F025-010-4-A	25	30	10	25

Driven by Coolant or Cutting Oil, Dimensions in mm

CoolSpeed® mini EX

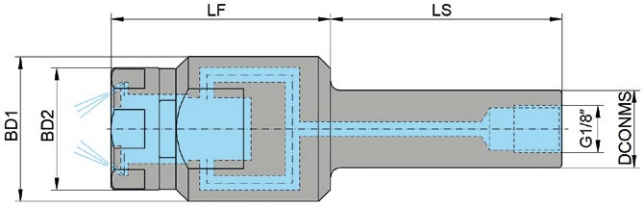

Item No.	DCONMS	LS	LF	BD1	BD2
CM-CE-R016-046-4-A	16	48	46	30	25
CM-CE-R022-046-4-A	22	48	46	30	25

Driven by Coolant or Cutting Oil, Dimensions in mm

CoolSpeed® mini 90

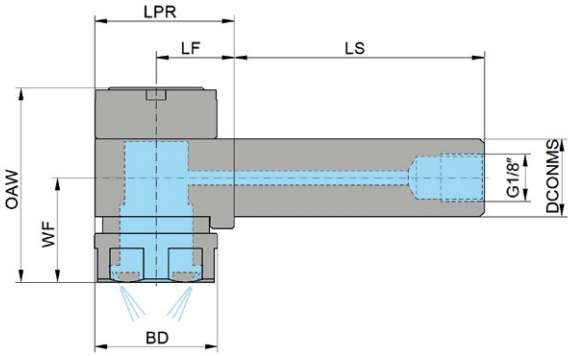

Item No.	DCONMS	LS	LF	LPR	WF	OAW	BD
CM-CI-R016-016-4-A	16	51	16	29	21,5	40	25

Driven by Coolant or Cutting Oil, Dimensions in mm

© WTO Werkzeug-Einrichtungen GmbH * Subject to change without notice * www.wto-tools.com

CoolSpeed® mini V

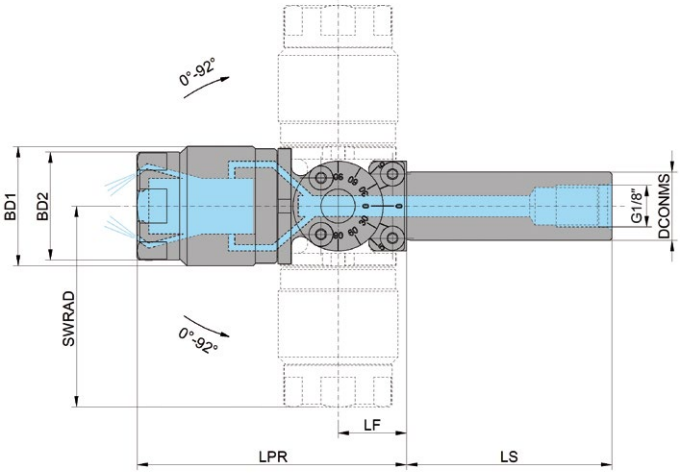

Item No.	DCONMS	LS	LF	LPR	SWRAD	BD1	BD2
CM-CV-R016-016-4-A	16	48	16	63	47	28	25

Driven by Coolant or Cutting Oil, Dimensions in mm

CoolSpeed® mini Air

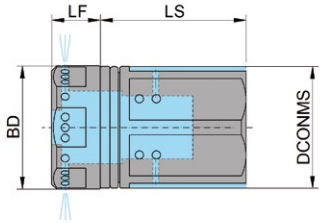

Note:
Do not clamp with side lock screws.

Item No.	DCONMS	LS	LF	BD
CM-AE-F025-010-12-A	25	30	10	25

Driven by Air Mist, Dimensions in mm

CoolSpeed® mini EX Air

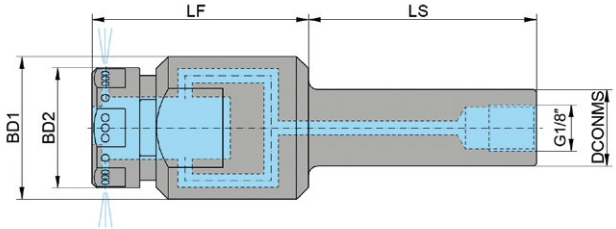

Item No.	DCONMS	LS	LF	BD1	BD2
CM-AE-R016-046-12-A	16	48	46	30	25

Driven by Air Mist, Dimensions in mm

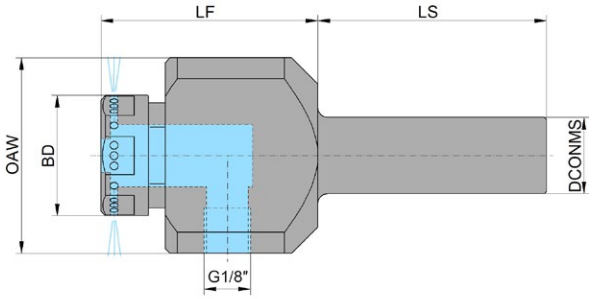

Item No.	DCONMS	LS	LF	OAW	BD
CM-AE-R016-046-12-B	16	48	46	41	25

Driven by Air Mist, Dimensions in mm

© WTO Werkzeug-Einrichtungen GmbH * Subject to change without notice * www.wto-tools.com

CoolSpeed® mini 90 Air

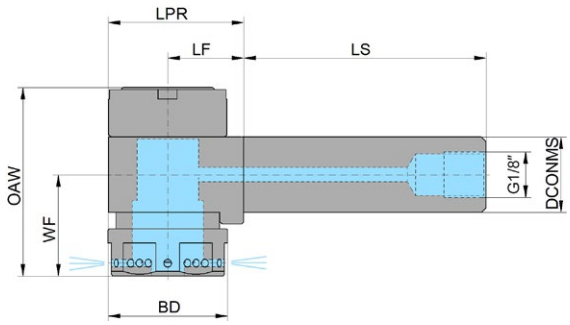

Item No.	DCONMS	LS	LF	LPR	WF	OAW	BD
CM-AI-R016-016-12-A	16	51	16	29	21,5	40	25

Driven by Air Mist, Dimensions in mm

CoolSpeed® mini EXS Air

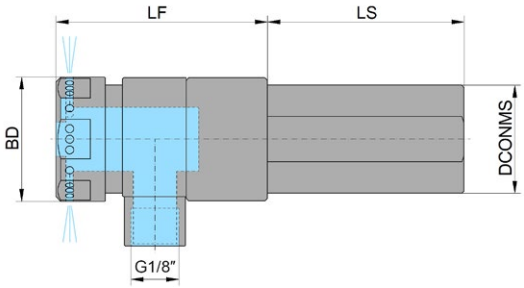

Item No.	DCONMS	LS	LF	BD
CM-AE-F075-043-12-A	19,05 (¾")	40	43	25
CM-AE-F022-043-12-A	22	40	43	25

inch dimensions

Driven by Air Mist, Dimensions in mm

CoolSpeed® mini V Air

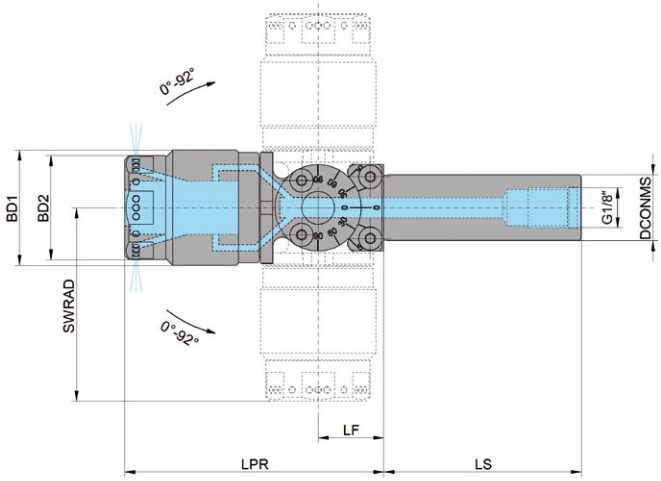

Item No.	DCONMS	LS	LF	LPR	SWRAD	BD1	BD2
CM-AV-R016-016-12-A	16	48	16	63	47	28	25

Driven by Air Mist, Dimensions in mm

Replacement kit

(2 bearings, 1 turbine)

Ø3 mm	CM-SRK-030
Ø4 mm	CM-SRK-040
Ø6 mm	CM-SRK-060

Bearing Puller

To extract the bearings from the CoolSpeed® housing.

CM-SBW-001

Assembly Device 3-in-1

Ø3, 4, 6 mm CM-SMD-346

Pressure Gauge

With RPM display, coolant connection G¼"

CM-SPG-60-C

Adapter for pressure gauge

Ø16 mm	CM-SPA-R016-4-A
Ø22 mm	CM-SPA-R022-4-A
Ø25 mm	CM-SPA-R025-4-A

Master Gauge

For high accurate angular alignment with CoolSpeed® mini V and mini V Air

CM-SMG-013-A

© WTO Werkzeug-Einrichtungen GmbH * Subject to change without notice * www.wto-tools.com

CoolSpeed® mini

Starter Set

Includes:
CoolSpeed® mini
CM-SRK-030 Replacement Kit Ø3 mm
CM-SRK-040 Replacement Kit Ø4 mm
CM-SRK-060 Replacement Kit Ø6 mm
CM-SMD-346 Assembly Device 3-in-1
CM-SBW-001 Bearing Puller
Single open-end Wrench 24 mm
CM-SPG-60-C Pressure gauge G¼"
Adapter for pressure gauge

Shaft Ø	CoolSpeed® mini	Starter Set
25	CM-CE-F025-010-4-A	CM-CE-F025-010-4-SK-A
16	CM-CE-R016-046-4-A	CM-CE-R016-046-4-SK-A

Dimensions in mm

CoolSpeed® mini Air

Starter Set

Includes:
CoolSpeed® mini Air
CM-SRK-030 Replacement Kit Ø3 mm
CM-SRK-040 Replacement Kit Ø4 mm
CM-SRK-060 Replacement Kit Ø6 mm
CM-SMD-346 Assembly Device 3-in-1
CM-SBW-001 Bearing Puller
Single open-end Wrench 24 mm

Shaft Ø	CoolSpeed® mini	Starter Set
25	CM-AE-F025-010-12-A	CM-AE-F025-010-12-SK-A
16	CM-AE-R016-046-12-A	CM-AE-R016-046-12-SK-A
16	CM-AE-R016-046-12-B	CM-AE-R016-046-12-SK-B

Dimensions in mm

Bluetooth Pressure Gauge G¼"

CM-SPG-60-SA

Replacement Battery

CM-SRB-2450-A

App „CoolSpeed”

The app connects to the Bluetooth Pressure Gauge and displays the rotation speed, coolant pressure, flow rate and power of the high-speed spindle in real time.

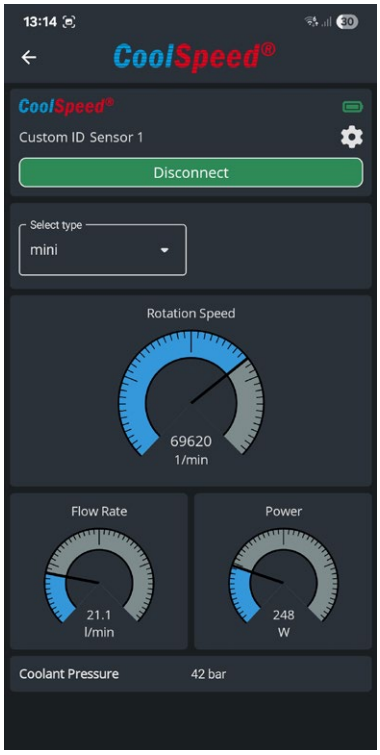

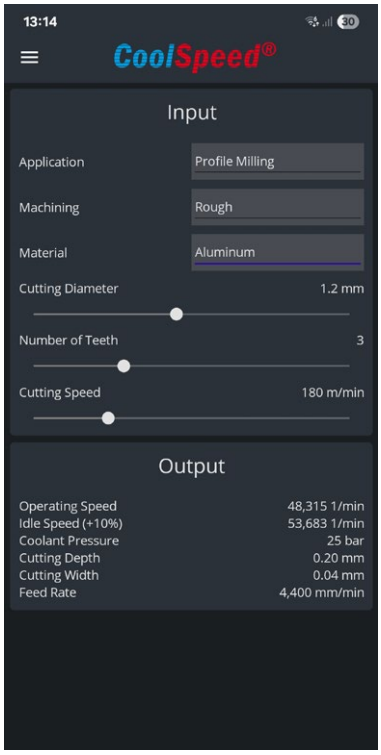

Download on the App Store

GET IT ON Google Play

© WTO Werkzeug-Einrichtungen GmbH * Subject to change without notice * www.wto-tools.com

CoolSpeed® mini

How to measure the Coolant Pressure

The CoolSpeed® mini rotation speed depends on the coolant pressure. Therefore, it is important to adjust the coolant pressure as needed for the application. The pressure test should always be performed directly on the spindle using the adapter for the pressure gauge.

Pressure measurement with analog manometer:

Pressure measurement with digital manometer:

The inner diameter of the coolant supply pipe should be at least 4 mm.

CoolSpeed® mini Air

Adjust the Air Pressure and the Amount of Oil

An additional Filter-Regulator-Lubricator Unit (not included in the delivery) must be used to operate CoolSpeed® mini Air.
The following instructions must be observed during operation:

- The air pressure should be set between 4-5 bar (58-73 psi)
- Operation is only permitted with oiled compressed air
- The oil quantity should be set to 5-10 drops/minute
- Only use oils in the ISO viscosity group VG10 to VG22
- A hose with an inner diameter of 4 or 6 mm should be chosen
- The air hose between the maintenance unit and CoolSpeed® mini Air should be as short as possible

Assembly of Bearings and Turbine onto the Cutting Tool

Note: Use only tools with h6 shank tolerance and form in accordance with ISO 3338-1.

1

2

3

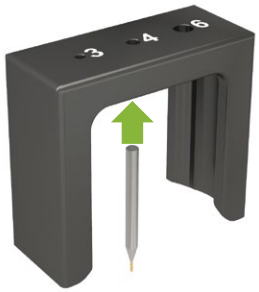

4

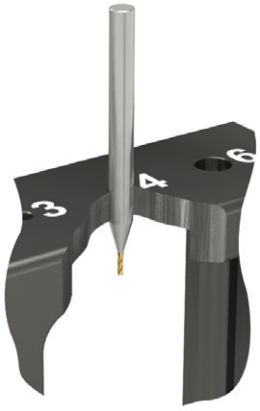

5

6

7

8

9

10

11

12

© WTO Werkzeug-Einrichtungen GmbH * Subject to change without notice * www.wto-tools.com

Recommended tool holder clamping

Hydraulic chuck

ER collet chuck – sealed

No side lock clamping!

Application Examples

	Material	Coolant Pressure [bar]	Idle Speed [rpm]	Operation Speed [rpm]	Tool-Ø / Cutting Values	2.0 Finish Machining	1.0 Finish Machining	0.5 Finish Machining
Engraving	Stainless Steel	20	48,000	43,000	a_p	0.16	0.08	0.04
					V_f	800	1,600	3,200
		40	68,000	61,000	a_p	0.16	0.08	0.04
					V_f	1,000	2,000	4,000
		60	80,000	72,000	a_p	0.16	0.08	0.04
					V_f	1,200	2,400	4,800
	Aluminum	20	48,000	43,000	a_p	0.27	0.13	0.07
					V_f	1,333	2,667	5,333
		40	68,000	61,000	a_p	0.27	0.13	0.07
					V_f	1,667	3,333	6,667
		60	80,000	72,000	a_p	0.27	0.13	0.07
					V_f	2,000	4,000	8,000
	Carbon Steel	20	48,000	43,000	a_p	0.18	0.09	0.05
					V_f	1,040	2,080	4,160
		40	68,000	61,000	a_p	0.18	0.09	0.05
					V_f	1,300	2,600	5,200
		60	80,000	72,000	a_p	0.18	0.09	0.05
					V_f	1,560	3,120	6,240
Drilling	Stainless Steel	20	48,000	43,000	V_f	1,000	1,500	2,250
		40	68,000	61,000	V_f	1,250	1,875	2,813
		60	80,000	72,000	V_f	1,500	2,250	3,375
	Aluminum	20	48,000	43,000	V_f	1,000	1,500	2,250
		40	68,000	61,000	V_f	1,250	1,875	2,813
		60	80,000	72,000	V_f	1,500	2,250	3,375
	Carbon Steel	20	48,000	43,000	V_f	1,000	1,500	2,250
		40	68,000	61,000	V_f	1,250	1,875	2,813
		60	80,000	72,000	V_f	1,500	2,250	3,375
Slot Milling	Stainless Steel	20	48,000	43,000	a_p	0.10	0.05	0.03
					V_f	400	800	1,600
		40	68,000	61,000	a_p	0.10	0.05	0.03
					V_f	500	1,000	2,000
		60	80,000	72,000	a_p	0.10	0.05	0.03
					V_f	600	1,200	2,400
	Aluminum	20	48,000	43,000	a_p	0.17	0.08	0.04
					V_f	667	1,333	2,667
		40	68,000	61,000	a_p	0.17	0.08	0.04
					V_f	833	1,667	3,333
		60	80,000	72,000	a_p	0.17	0.08	0.04
					V_f	1,000	2,000	4,000
	Carbon Steel	20	48,000	43,000	a_p	0.11	0.06	0.03
					V_f	520	1,040	2,080
		40	68,000	61,000	a_p	0.11	0.06	0.03
					V_f	520	1,300	2,600
		60	80,000	72,000	a_p	0.11	0.06	0.03
					V_f	780	1,560	3,120

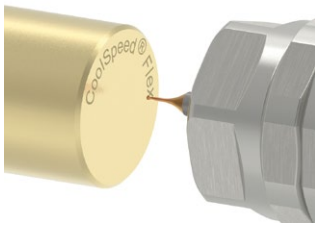

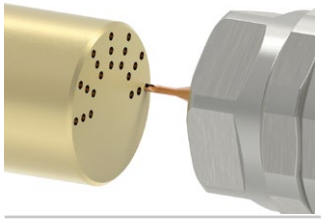

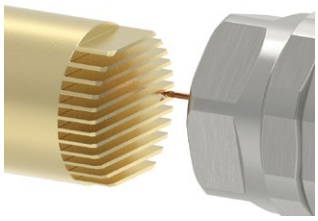

Dimensions a_p in mm, V_f in mm/min
The cutting values apply to CoolSpeed® mini using 4 jets. The values are for orientation only and shall be adapted to the specific application by gradually increasing V_f until the optimum cutting result is achieved.

© WTO Werkzeug-Einrichtungen GmbH * Subject to change without notice * www.wto-tools.com

Application Examples

Side Milling

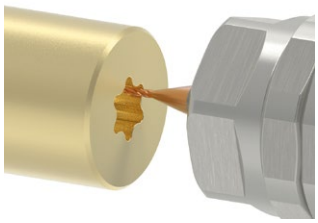

				Tool-Ø	2.0		1.0		0.5	
Material	Coolant Pressure [bar]	Idle Speed [rpm]	Operation Speed [rpm]	Cutting Values	Rough Machining	Finish Machining	Rough Machining	Finish Machining	Rough Machining	Finish Machining
Stainless Steel	20	48,000	43,000	a_p	0.40	0.40	0.20	0.20	0.10	0.10
				a_e	0.05	0.02	0.04	0.02	0.02	0.01
				V_f	2,000	1,000	3,000	1,500	4,500	2,250
	40	68,000	61,000	a_p	0.40	0.40	0.20	0.20	0.10	0.10
				a_e	0.05	0.02	0.04	0.02	0.02	0.01
				V_f	2,500	1,250	3,750	1,875	5,625	2,813
	60	80,000	72,000	a_p	0.40	0.40	0.20	0.20	0.10	0.10
				a_e	0.05	0.02	0.04	0.02	0.02	0.01
				V_f	3,000	1,500	4,500	2,250	6,750	3,375
Aluminum	20	48,000	43,000	a_p	0.67	0.67	0.33	0.33	0.17	0.17
				a_e	0.08	0.04	0.06	0.03	0.04	0.02
				V_f	3,333	1,667	5,000	2,500	7,500	3,750
	40	68,000	61,000	a_p	0.67	0.67	0.33	0.33	0.17	0.17
				a_e	0.08	0.04	0.06	0.03	0.04	0.02
				V_f	4,167	2,083	6,250	3,125	9,375	4,688
	60	80,000	72,000	a_p	0.67	0.67	0.33	0.33	0.17	0.17
				a_e	0.08	0.04	0.06	0.03	0.04	0.02
				V_f	5,000	2,500	7,500	3,750	12,500	5,625
Carbon Steel	20	48,000	43,000	a_p	0.46	0.46	0.23	0.23	0.11	0.11
				a_e	0.08	0.04	0.06	0.03	0.04	0.02
				V_f	2,600	1,300	3,900	1,950	5,850	2,925
	40	68,000	61,000	a_p	0.46	0.46	0.23	0.23	0.11	0.11
				a_e	0.08	0.04	0.06	0.03	0.04	0.02
				V_f	3,250	1,625	4,875	2,438	7,313	3,656
	60	80,000	72,000	a_p	0.46	0.46	0.23	0.23	0.11	0.11
				a_e	0.08	0.04	0.06	0.03	0.04	0.02
				V_f	3,900	1,950	5,850	2,925	8,775	4,388

Profile Milling

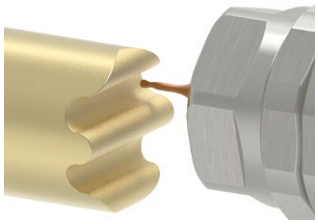

Stainless Steel	20	48,000	43,000	a_p	0.20	0.10	0.10	0.05	0.05	0.03
				a_e	0.03	0.02	0.02	0.01	0.01	0.01
				V_f	1,000	500	2,000	1,000	4,000	2,000
	40	68,000	61,000	a_p	0.20	0.10	0.10	0.05	0.05	0.03
				a_e	0.03	0.02	0.02	0.01	0.01	0.01
				V_f	1,250	625	2,500	1,250	5,000	2,500
	60	80,000	72,000	a_p	0.20	0.10	0.10	0.05	0.05	0.03
				a_e	0.03	0.02	0.02	0.01	0.01	0.01
				V_f	1,500	750	3,000	1,500	6,000	3,000
Aluminum	20	48,000	43,000	a_p	0.33	0.17	0.17	0.08	0.08	0.04
				a_e	0.05	0.03	0.03	0.01	0.01	0.01
				V_f	1,667	833	3,333	1,667	6,667	3,333
	40	68,000	61,000	a_p	0.33	0.17	0.17	0.08	0.08	0.04
				a_e	0.05	0.03	0.03	0.01	0.01	0.01
				V_f	2,083	1,042	4,167	2,083	8,333	4,167
	60	80,000	72,000	a_p	0.33	0.17	0.17	0.08	0.08	0.04
				a_e	0.05	0.03	0.03	0.01	0.01	0.01
				V_f	2,500	1,250	5,000	2,500	10,000	5,000
Carbon Steel	20	48,000	43,000	a_p	0.23	0.11	0.11	0.06	0.06	0.03
				a_e	0.05	0.03	0.03	0.01	0.01	0.01
				V_f	1,300	650	2,600	1,300	5,200	2,600
	40	68,000	61,000	a_p	0.23	0.11	0.11	0.06	0.06	0.03
				a_e	0.05	0.03	0.03	0.01	0.01	0.01
				V_f	1,625	813	3,250	1,625	6,500	3,250
	60	80,000	72,000	a_p	0.23	0.11	0.11	0.06	0.06	0.03
				a_e	0.05	0.03	0.03	0.01	0.01	0.01
				V_f	1,950	975	3,900	1,950	7,800	3,900

Dimensions a_p, a_e in mm, V_f in mm/min
The cutting values apply to CoolSpeed® mini using 4 jets. The values are for orientation only and shall be adapted to the specific application by gradually increasing V_f until the optimum cutting result is achieved.

CoolSpeed®

www.coolspeed.com | info@coolspeed.com

North America

WTO Inc.
9210 Porters View Dr.
Charlotte, NC 28273
USA
www.wto-usa.com

Europe

WTO Werkzeug-Einrichtungen GmbH
Headquarters
Neuer Hohdammweg 1
77797 Ohlsbach
Germany
www.wto.de

Asia

WTO Precision Tool Holders (Shanghai) Co. Ltd.
Room 109-110, Building 2
No. 228 Banting Road
Jiuting Town,
Songjiang District
201615 Shanghai
China
www.wto-asia.com

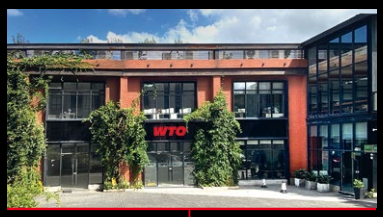

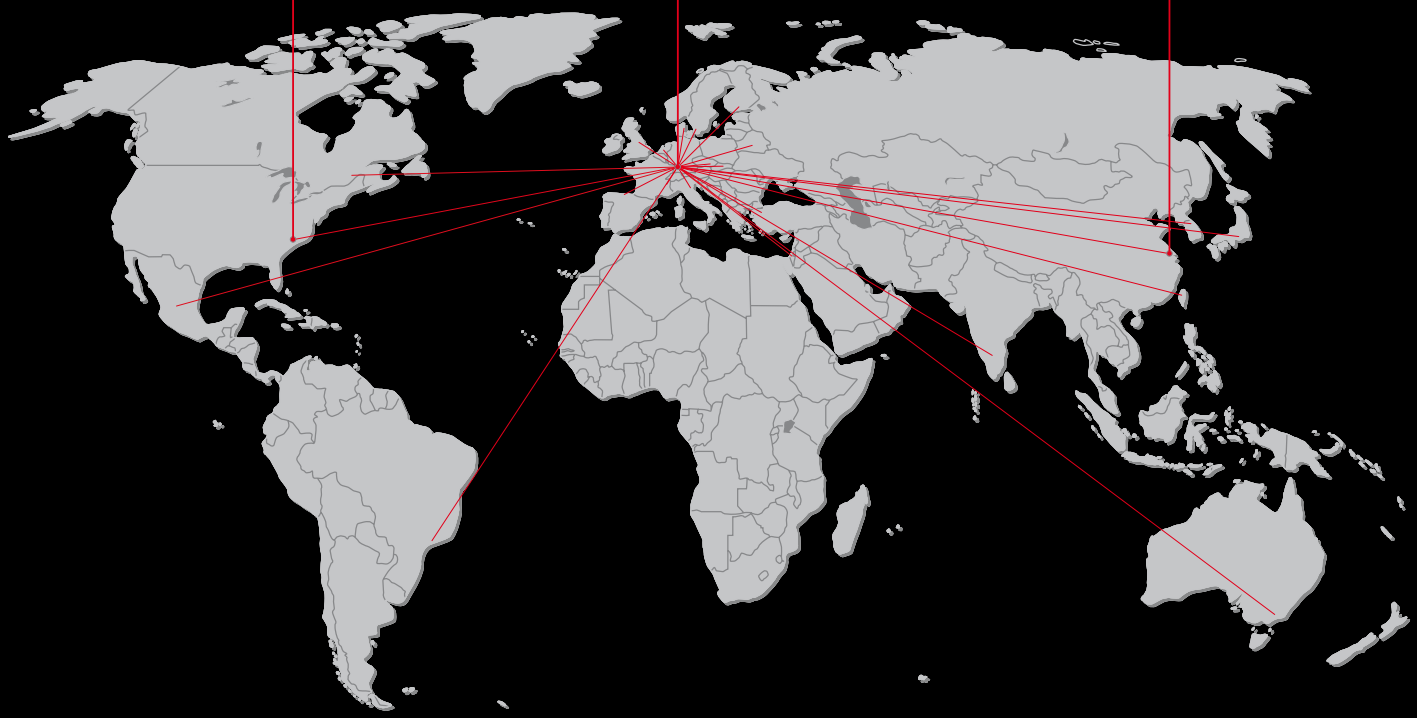

WTO worldwide

WTO is a trade mark of WTO Vermögensverwaltung GmbH
CoolSpeed is a trademark of WTO Inc.

08 | 2026 en