# ULTRA 80

## AUTOMATIC BAR FEEDING SYSTEM FOR FIXED HEADSTOCK LATHES

Diameter range: 12–80 mm

YOUR ONE-STOP-SHOP
FOR MACHINE-TOOL PERIPHERALS

## INNOVATION FOR THE HIGHEST GUIDING PERFORMANCE

The main beam consists of 700 kg mineral casting, a preferred material used for high quality drilling, turning and grinding machines. Its high damping properties and a strong structural stiffness allow the barfeeder to run any bars to the optimal speed and guarantees the maximum productivity during the machining process.

Thanks to the breveted manufacturing process of the beam, a very accurate positioning of the functional elements on the core beam and the long-term stability of the material ensures high operational reliability.

## HIGH-QUALITY ADAPTIVE SUPPORT WHERE IT IS NECESSARY

A revolutionary, very rigid front rest that adapts to the bar within a wide diameter range is installed as the last guiding zone before the bar enters the lathe's spindle. Providing a length of 400 mm and working within a 20 mm range for each guiding element by shape changing, the diameter range can be quickly readjusted by simply inserting a new guiding element in the installed ones. A significant oil supply further enhances the guiding effect.

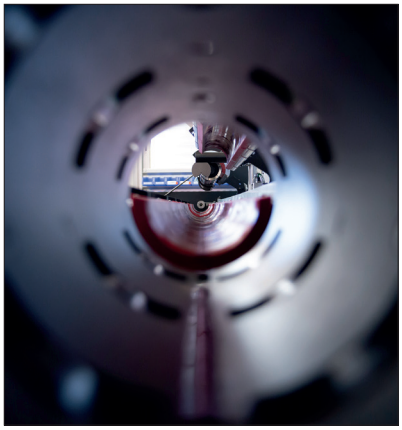

## INSPIRED BY THE HYDROBAR: THE BAR IS ALWAYS IN A CLOSED TUBE FILLED WITH OIL

Firmly held by the pusher's collet, the bar rotates in the massive closed sections of the guiding zone, while a steady flow of oil ensures the creation of the hydrodynamic effect. When a section opens, the bar is already in the next closed section, and the oil flow is optimized for full guiding effect.

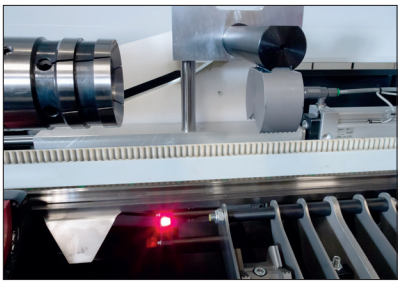

## REMNANT MANAGEMENT MADE SIMPLE

A dependable insertion and extraction system is the key to evacuate the remnants through the barfeed safely and reliably every time. Its oversized jaws and actuator give the ULTRA 80 all the gripping power needed for standard conditions, and for pusher collets deviating from market standards, the integrated booster with additional pneumatic power further helps avoiding production losses due to issues encountered during the new bar loading sequence. All of that without tools nor manual adjustment.

Just as with any LNS barfeed, working with cone only requires changing the pusher and setting the appropriate parameters.

## VERSATILITY THROUGH DIFFERENT LOADING SYSTEMS

To adapt to each customer's situation, the ULTRA 80 is proposed in 2 versions:

- A 330 mm internal ramp, fully integrated into the barfeed, for compact footprint
- A 650 mm external low ramp with elevator, for maximum productivity and easy loading

## SPECIAL ATTENTION TO ERGONOMICS

An LNS specialty, the colourful, touchscreen HMI always gives the operator all the relevant data and menus in the current context of the barfeed, reducing unnecessary information and operation errors. Warnings and alerts are displayed with text and pictures, for fast and hassle-free continuation of work.

The new generation equipping the ULTRA 80 simplifies these principles by a reduction of the navigation layers, the addition of quick access keys to the main screen, and the deeper integration of the parts library, which allows up to 500 parts to be stored and recalled in an instant.

## EASY ACCESS TO THE SPINDLE

The longitudinal movement system frees up access to the spindle and facilitates replacement of the reduction tubes and other maintenance operations. As this device is located between the barfeed and its stands anchored to the ground, the alignment with the spindle is still guaranteed.

## INDUSTRY 4.0 INTEGRATION FOR A 360° INTERACTION AROUND THE PERIPHERAL

Communicating alerts, switching production on-the-fly, or just remotely monitoring the current production has never been easier, thanks to our solutions:

- Machine-to-machine (M2M): high-level interface communicating with the lathe to efficiently manage the remnant
- Machine-to-human (M2H): remote access to the barfeed, to monitor its state
- Machine-to-Systems (M2S): direct data access for ERP/MES systems, for analysis and data-driven decisions through industrial standard communication protocols

## YOUR ONE-STOP-SHOP FOR MACHINE-TOOL PERIPHERALS

LNS provides a full range of bar feeders, chip conveyors, coolant management systems and air filtration systems which are second to none on the market. We are known in the industry for the solid expertise we have gained over several decades in an exceptionally wide range of applications, our excellent customer service and technical support. This support is ensured by highly qualified technicians who are available at key locations throughout Europe.

## TECHNICAL DATA

| **Capacity** | | **ULTRA 80** |
|---|---|---|
| Diameter | mm | 12 – 80 |
| Bar length 3 m/4 m | mm | 3200 / 4200 |
| Loading system | | Side / Elevator |
| Loading capacity | mm | 330 / 650 |
| Loading side | | Left / Front |
| **Application** | | |
| Headstock | | Fixed |
| Remnant length | mm | 110 – 400 |
| Synchronisation | | PLC / Servo |
| Remote control | | Colour touchscreen |
| Longitudinal movement | mm | 600 |
| **Changeover** | | |
| Diameter changeover | mins | 2 (in the area of the guide channels) |
| Full diameter changeover | mins | 10 (for all guiding elements) |
| **Driving system** | | |
| Motor | | Servo |
| Drive | | Belt |
| Guide | | Guiding channel |
| Oil | | 120 L, ISO 100 |

## FLOOR PLAN (MM)

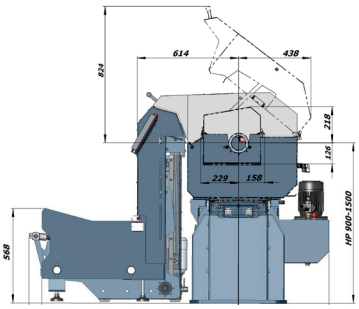


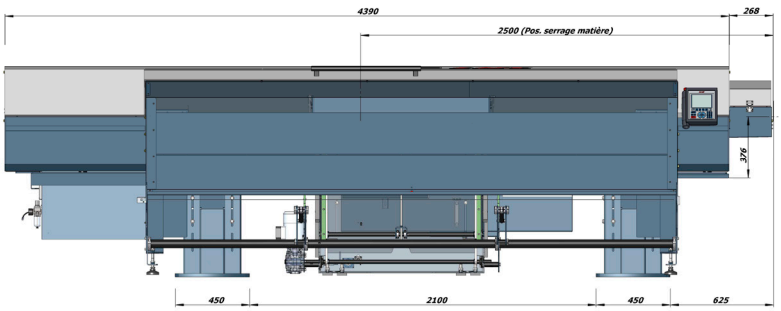


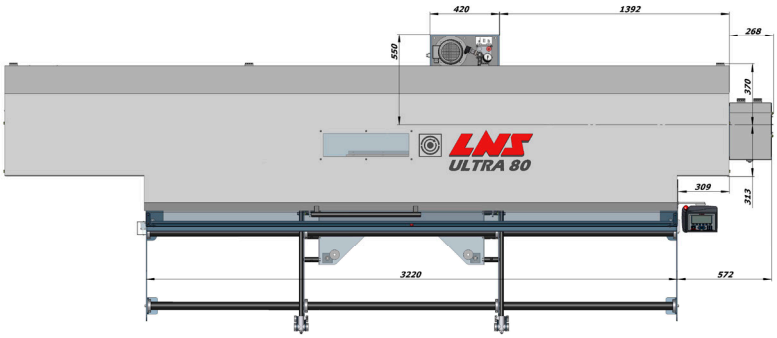


LNS Europe
Route de Frinvillier
2534 Orvin
Switzerland

+41 32 358 02 00
LNS@LNS-europe.com
www.LNS-europe.com

Subject to modifications / Ultra 80 – EN / 3-2023