TURBO MF4 CHIP CONVEYOR

FILTERING CHIP CONVEYOR

Filtration down to 50 microns

Mixed Materials
Coarse or Stringy Chips
All Sizes Mixed

Aluminum
Fine Chips
Coarse and Stringy

PERIPHERAL VISION
For CNC machine tool peripherals, it's ***LNS***, then all the rest

The Most Versatile Chip Conveyor with a Long History

With a long track record over many years, the Turbo Microfine filtering chip conveyors have a proven track record. The MF4 is the latest generation of the Microfine product, combining years of experience into a product that will handle any type of chip material, any type of chip load and any chip geometry including fines, broken and stringy chips, all while providing filtered coolant to keep the machine sump maintenance free.

Dual Purpose Conveying

Heavy chip removal of all sizes with filtration is essential to keeping your production running efficiently.

The Turbo MF4 is designed and built to take on the toughest chip removal jobs and simultaneously provide superior filtration. The Turbo MF4 is a dual conveyor with a new compact design for reduced footprint. The upper conveyor is a hinge belt type which can be specified in standard or super heavy duty configurations to best match your chip load. The lower conveyor is a scraper type which removes the fines and small chips trapped in the lower conveyor. Coolant flows up to 150 GPM and is filtered with the standard filter drum design to 50 microns. The Coolant tank is configured to your requirements, depending on the machine tool design.

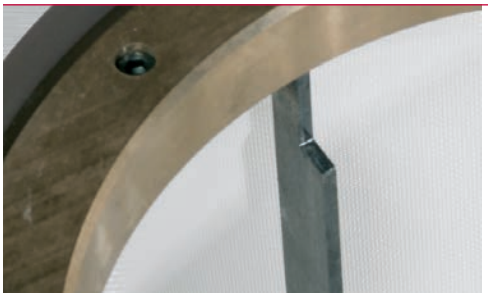

Large Capacity Coolant Flow

Modern machine tool designers have greatly increased the need for coolant volume. Cutting tools, processes and increased chip removal requires an ever increasing need for this coolant flow. The Turbo MF4 was designed with this increase in coolant flow in mind. The large diameter filter drums provide coolant flow of up to 150 GPM matching the needs of high flow pumps from any machining requirement.

Versatility

Today's machines are capable of combining a wide variety of machining processes. Heavy chip loads from high horse power roughing cuts combined with very fine finishing create a wide range of chip loads and chip types from the same machining operation.

The upper conveyor separates heavy chip loads from the coolant stream. This conveyor efficiently removes chunks, stringy, bushy and large chips and is ideal for multiple material applications. Any small chip or particle passing through the upper conveyor is trapped in the lower filtering conveyor. High speed aluminum machining is one of the many applications ideal for the Turbo MF4.

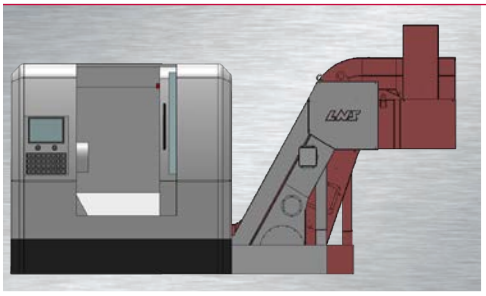

Floor Space Utilization

Many of today's machine designs have tight spaces in which the conveyor needs to fit or have limited floor space around the machine tool.

The Turbo MF4 eliminates the need for extra floor space due to its compact design. Turbo MF4 is no larger than most standard hinge belt conveyors. This makes the MF4 ideal for factories with limited floor space and obstructions such as pillars, walls or with multiple machines side-to-side and/or back-to-back.

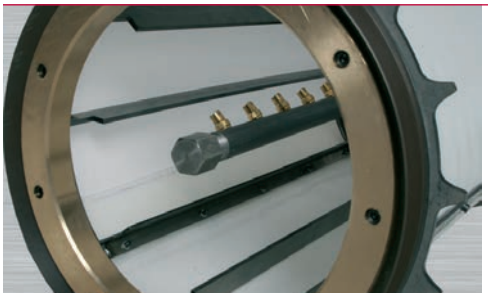

Maintenance Free and Hassel-Free Filtration

Expensive machine tools are only making money when they produce parts. What is the best way to eliminate or reduce tank maintenance and reduce indirect labor associated with this maintenance?

The self-cleaning filter drum located in the lower conveyor is protected from heavy chips by the upper conveyor and is designed with a very fine filter material which traps particles greater than 50 microns keeping all fine chips out of the coolant tank. The filter drum seal is a unique design incorporating Viton seal material and a metal pre-seal. The metal seal prevents chips from damaging the softer Viton material. The combination of these two seals creates a seal impervious to chip contamination, coolant degradation and wear.

The drum rotates and is sprayed with coolant providing self-cleaning, maintenance free filtration. The scraper conveyor removes the fines and small chips trapped in the lower conveyor. Clean, filtered coolant is returned to the machine sump assuring maximum tool life and extended coolant life while minimizing tank maintenance.

Serviceability

Any component in a high wear environment must be easy to service. The lower conveyor is a scraper-type, ideal for removal of small particles carried through the upper conveyor. Fines trapped by the filter drum are deposited on the incline. Easy access to the drum improves maintenance and assures low cost and maximum uptime.

Proven Performance

Since 2000, the Turbo MF product range has worked in shops around the world to efficiently remove chips from machining operations while filtering coolant to a 50 micron level. The drum design ensures the filtration level is not compromised over a long life time. The availability of standard duty and two sizes of super heavy-duty frames to match the chip load from any machining process.

Specifications subject to change without notice

Turbo MF4 CHIP CONVEYOR

TECHNICAL SPECIFICATIONS

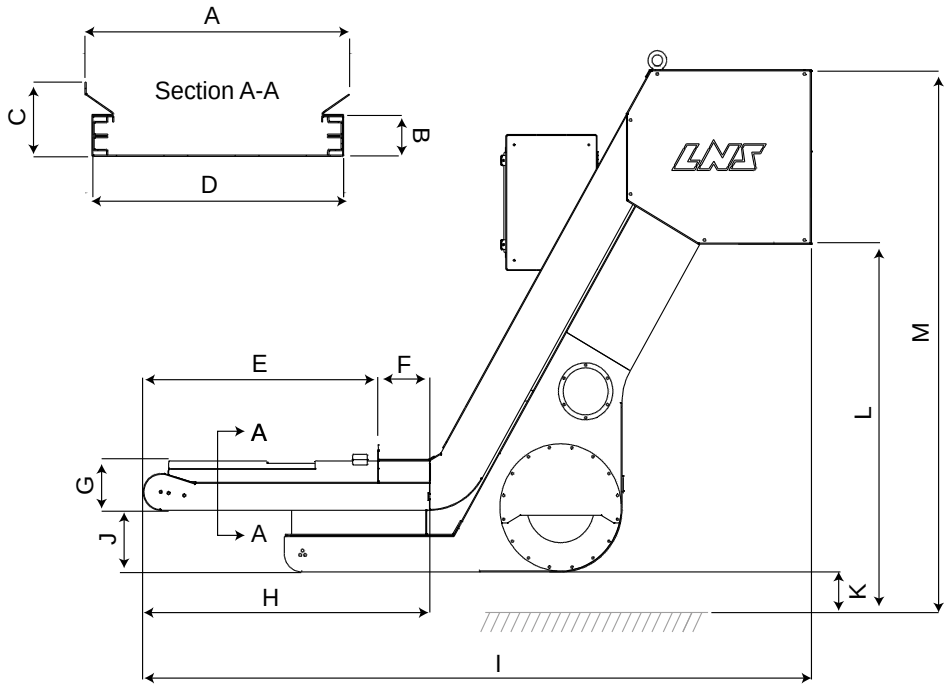

CONVEYOR FRAME DIMENSIONS (INCHES)				
Type (Upper)		Standard Duty	Super Heavy Duty	Super Heavy Duty
Sidewing Height		0.75	1.00	1.5
Belt Width (2" increments)		5-23	4-24	4-36
W	Width (Upper)	BW + 2.06	BW + 3.63	BW + 3.88
T	Height	10.23	10.80	10.67
L	Leg Location	12.80	12.80	12.80

SPECIFICATIONS	
Variable	Description
A	Baffle Width
B	Frame Height
C	Baffle Height
D	Frame Width
E	Baffle Length
F	Covered Load Length
G	Upper Conveyor Tail Height
H	Load Length
I	Overall Length
J	Lower Conveyor Tail Height
K	Height Above Floor
L	Discharge Height
M	Overall Height

PERIPHERAL VISION

Peripherals, by definition, are an outer boundary. But at LNS, that boundary is where we put our focus. Because here's the secret—with LNS peripherals on your side, you can turn your attention to what you do best—making chips and making money.

That's why we do what we do. Five product categories and industry-best expertise means no company on earth can match the passion and vision we have for machine tool peripherals.

LNS Turbo
203 Turbo Drive
Kings Mountain, NC 28086

513-528-5674
Allproducts-sales@LNS-northamerica.com
www.LNS-northamerica.com