QUICK LOAD SERVO 105

YOUR NEW REFERENCE FOR SHORT
BARS FROM 6 TO 105 MM

The Quick Load Servo 105 is a versatile and fully automatic short bar loader that offers maximum flexibility for small and medium series in the 6 to 105 mm diameter range. This bar loader is used on fixed headstock lathes and is used to perform numerous operations in record time. Its compact design guarantees a minimal footprint.

YOUR ONE-STOP SHOP FOR
MACHINE TOOL PERIPHERALS

ENHANCED SAFETY

The opening system on the Quick Load Servo 105 cover is one of the biggest visible changes to the device. The cover is easy to open and close for safe maintenance of the bar loader.

REMOTE CONTROL

With the focus on ease of use and efficiency, the device is fully electric and the movements are automatic. The Quick Load Servo 105 remote control is used to perform fully automated series changes by simply entering the new diameter, the bar profile and the workpiece length. The settings are intuitive and essential information can be accessed using the control's touchpad.

QUICK OPERATIONS

Quick, reliable turning operations are key to achieving maximum productivity. With this in mind, the Quick Load Servo 105 has been designed to allow operations to be performed in record time. Reduced loading cycles, very quick movements and changes with the easy click pusher... everything has been designed to reduce unproductive movement time and production downtime.

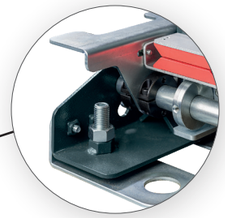

RETRACTION SYSTEM

The Quick Load Servo 105 offers a wide range of equipment on the standard version, including its retraction system on the X or Z axis (based on the customer's preference) which enables easy access during servicing or when changing the spindle reductions. This mechanism is connected to the electrical system to enhance operational safety.

LOADING SYSTEM

The Quick Load Servo 105 is a simple and efficient loading system that offers high production autonomy. The 650 mm deep side magazine can hold 108 ø 6 mm bars, 8 ø 80 mm bars or 6 ø 100 mm bars. With its cover closed, the loading area is made safe for operators.

LOADING OPTIONS

BASIC RAMP for a standard or economy model

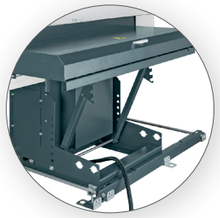

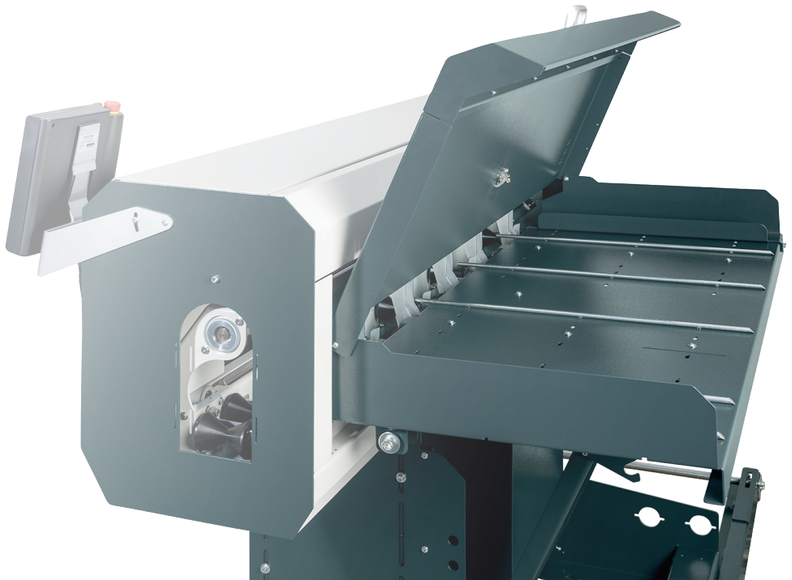

HEAVY DUTY for enhanced safety with heavy loads

LIFT for easy bar loading with a carrier or gantry

YOUR ONE-STOP SHOP FOR MACHINE TOOL PERIPHERALS

LNS offers the market's only complete range of systems for bar loading, chip and coolant management and air filtration. We are renowned for our extensive expertise gained over several decades in a vast range of applications, as well as our customer service and technical support. This support is provided by qualified technicians in strategic locations throughout Europe.

SPINDLE REDUCTION TUBES

Smart bar positioning via the servo motor ensures unrivalled precision and offers a variety of positioning modes to prevent the bar from colliding with the turret. Because the machining quality depends on the guiding inside the spindle, LNS offers and recommends spindle reduction tubes that improve guiding and ensure high rotation speeds. Designed for fixed headstock lathes, the spindle reduction tubes reduce vibrations and help boost production thanks to optimal cutting speeds. This results in a longer tool service life and a significant improvement in machined surfaces and workpieces.
For optimal performance, LNS recommends a spindle reduction tube with a diameter 2 mm greater than that of your short bar.

TECHNICAL SPECIFICATIONS

Capacity		
Diameter	mm	ø 6 – 105
Bar length (limited to the spindle length)	mm	300 – 1600
Loading system		Lateral magazine
Loading capacity	mm	650
Loading side		Front/Rear
Applications		
Headstock type		Fixed
X or Z movement	mm	585
Diameter change		
Diameter adjustment	sec	15 (automatic)
Total changeover	mins	1 (for the pusher)
Motorization		
Motor		Servo
Drive		Notched belt
Options		
Specific version with 2000 mm pusher		
Workpiece/billet loading		
Profiled bar loading		
Table for heavy loads		
Lift		
1200 mm long retraction		
Compatible with SE880 spindle extension		

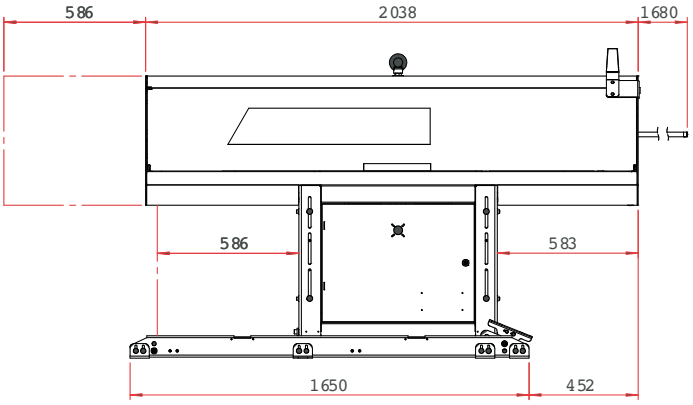

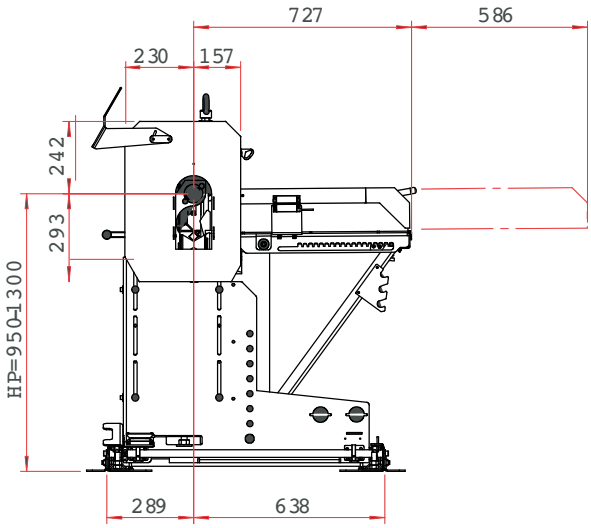

⚠ The bar length must never exceed the spindle length.

LNS Europe
Route de Frinvillier
2534 Orvin
Switzerland

+41 32 358 02 00
LNS@LNS-europe.com
www.LNS-europe.com

Subject to modification / QLS 105 – EN / 06-2022