CHIPBLASTER B-SERIES

HIGH PRESSURE COOLANT SYSTEM UP TO 35 OR 70 BAR

SMALL FOOTPRINT, AFFORDABILITY AND EASY MOBILITY

Chipblaster B-Series are affordable fixed rate medium or high-pressure coolant systems designed to have a small footprint to save valuable floor space. The B-Series units only requires coolant connections and a functional interface from the machine tool to operate.

	B-30/35	B-30/70
Volumes	Up to 30 Liters per minute	
Pressures	Up to 35 Bar	Up to 70 Bar
Standard Coolant Tank Capacity	N/A	
Flow rate	Fixed	
Power Voltage	200V or 400V	
Pump Type	Piston	
Filtration	Single Cartridge	Dual Cartridge
Options	1 or 4 outlets	

YOUR ONE-STOP-SHOP FOR MACHINE-TOOL PERIPHERALS

LNS provides a full range of bar feeders, chip conveyors, coolant management systems and air filtration systems which is second to none on the market. We are known in the industry for the solid expertise we have gained over several decades in an exceptionally wide range of applications, our excellent customer service and technical support. This support is ensured by highly qualified technicians who are available at key locations throughout Europe.

TWO PRESSURE/FLOW OPTIONS

The B-Series are single M code controlled, fixed rate units that can be equipped with two different pressures with a flow of 30 liters per minute. The B-30/35 allows for 35 bar pressure while the B-30/70 allows for 70 bar pressure.

USER FRIENDLY GAUGES

The high-pressure, filter inlet and filter outlet pressure gauges are positioned at an angle for convenient access and viewing.

EASY MAINTENANCE

The B-Series features a single or double cartridge filter with filtering sizes down to 10 microns. The manual crossover on the double filter B-30/70 allows the unit to continue to operate while filters are being replaced. The multi directional casters allow easy mobility of the unit for installation and maintenance.

FLOOR PLAN (MM)

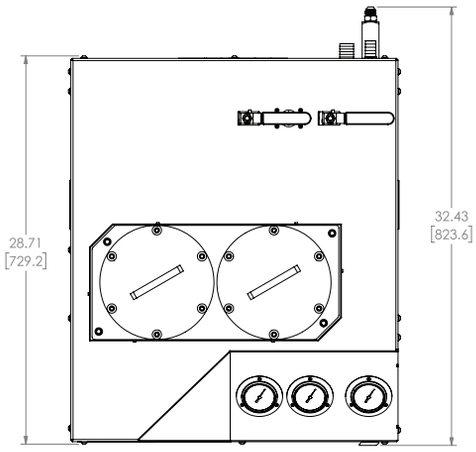

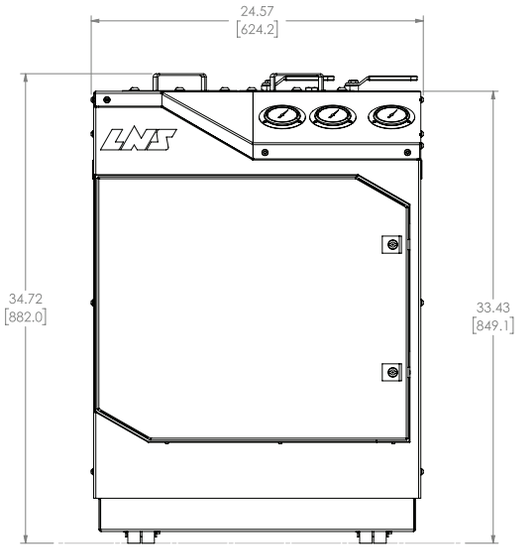

LNS Europe
Route de Frinvillier
2534 Orvin
Switzerland

+41 32 358 02 00
LNS@LNS-europe.com
www.LNS-europe.com

Subject to modifications / Chipblaster B-Series – EN / 11-2022